Automatic Washers

Refer to Page 3 for Model Numbers

Parts

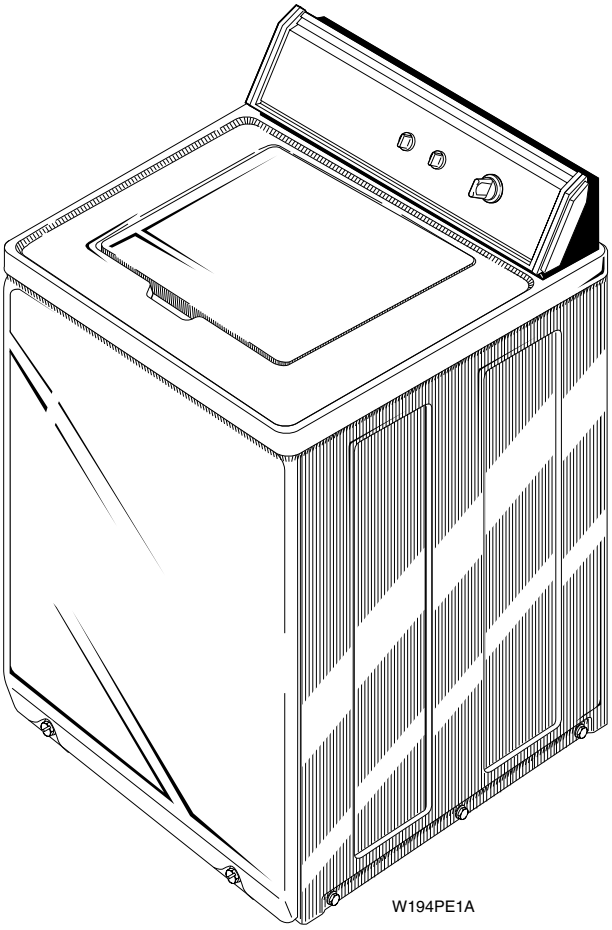

Alliance
Laundry Systems

Part No. 37399R5
June 2000

Table of Contents

Title	Page
Parts Ordering Information	2
Nameplate Location	2
Model Identification	3
Graphic Panel, Control Hood and Controls (Model AWM190*2)	4
Graphic Panel, Control Hood and Controls (Models AWM2702*2, AWM371*2, AWM372*2 and AWM373*2)	6
Graphic Panel, Control Hood and Controls (Models AWM290*2, AWM392*2 and AWM393*2)	8
Graphic Panel, Control Hood and Controls (Models AWM472*2, AWM473*2 and AWM573*2)	10
Graphic Panel, Control Hood and Controls (Model AWM593*2)	12
Cabinet Top, Loading Door and Control Rear Panel	14
Out-of-Balance Switch	16
Motor, Mounting Bracket, Belt, Pump and Idler Assembly	18
Inlet Hose, Fill Hose, Mixing Valve and Mounting Bracket	20
Agitator, Drive Bell, Seal Kit, Washtub and Hub (Models AWM190*2, AWM270*2 and AWM290*2)	22
Agitator, Drive Bell, Seal Kit, Washtub and Hub (All models except AWM190*2, AWM270*2 and AWM290*2)	24
Outer Tub, Cover and Pressure Hose	26
Drain Hose and Siphon Break	28
Transmission Assembly and Balancing Ring	30
34526P Transmission Assembly	32
Bearing Housing, Brake, Pulley and Pivot Dome	34
Front Panel, Base Assembly and Cabinet Assembly	36
Mixing Valve and Motor Connection Blocks, Terminals and Terminal Extractor Tool	38
Power Cord and Terminals	40
Terminals	42
Special Tools	44
Special Tools	46
Wire Harnesses and Wires	48
Production Literature	48
Parts Index	49

© Copyright 2000, Alliance Laundry Systems LLC

All rights reserved. No part of the contents of this book may be reproduced or transmitted in any form or by any means without the expressed written consent of the publisher.

Parts Ordering Information

If literature or replacement parts are required, contact the source from whom the machine was purchased or contact Alliance Laundry Systems at (920) 748-3950 for the name and address of the nearest authorized parts distributor.

For technical assistance, call (920) 748-3121.

Nameplate Location

When calling or writing about your product, be sure to mention model and serial numbers. Model and serial numbers are located on nameplate(s) as shown.

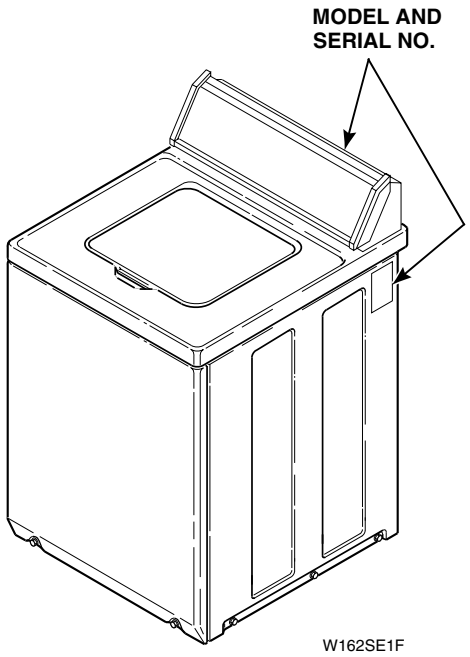

Model Identification

Information in this manual is applicable to these washers:

Model Number	Manufacturing Number	One-Speed Motor	Two-speed Motor	Timer Model	Porcelain Washtub (cu. ft.)	Stainless Steel Washtub (cu. ft.)
AWM190W2	PAWM190W2	X		X	2.7	
AWM270W2	PAWM270W2	X		X	2.7	
AWM290L2	PAWM290L2	X		X	2.7	
AWM290W2	PAWM290W2	X		X	2.7	
AWM371W2	PAWM371W2	X		X		2.7
AWM372W2	PAWM372W2	X		X	3.0	
AWM373W2	PAWM373W2	X		X		3.0
AWM392L2	PAWM392L2	X		X	3.0	
AWM392W2	PAWM392W2	X		X	3.0	
AWM393L2	PAWM393L2	X		X		3.0
AWM393W2	PAWM393W2	X		X		3.0
AWM472W2	PAWM472W2		X	X	3.0	
AWM473W2	PAWM473W2		X	X		3.0
AWM573W2	PAWM573W2		X	X		3.0
AWM593L2	PAWM593L2		X	X		3.0
AWM593W2	PAWM593W2		X	X		3.0

Notes

Graphic Panel, Control Hood and Controls

Model AWM190*2

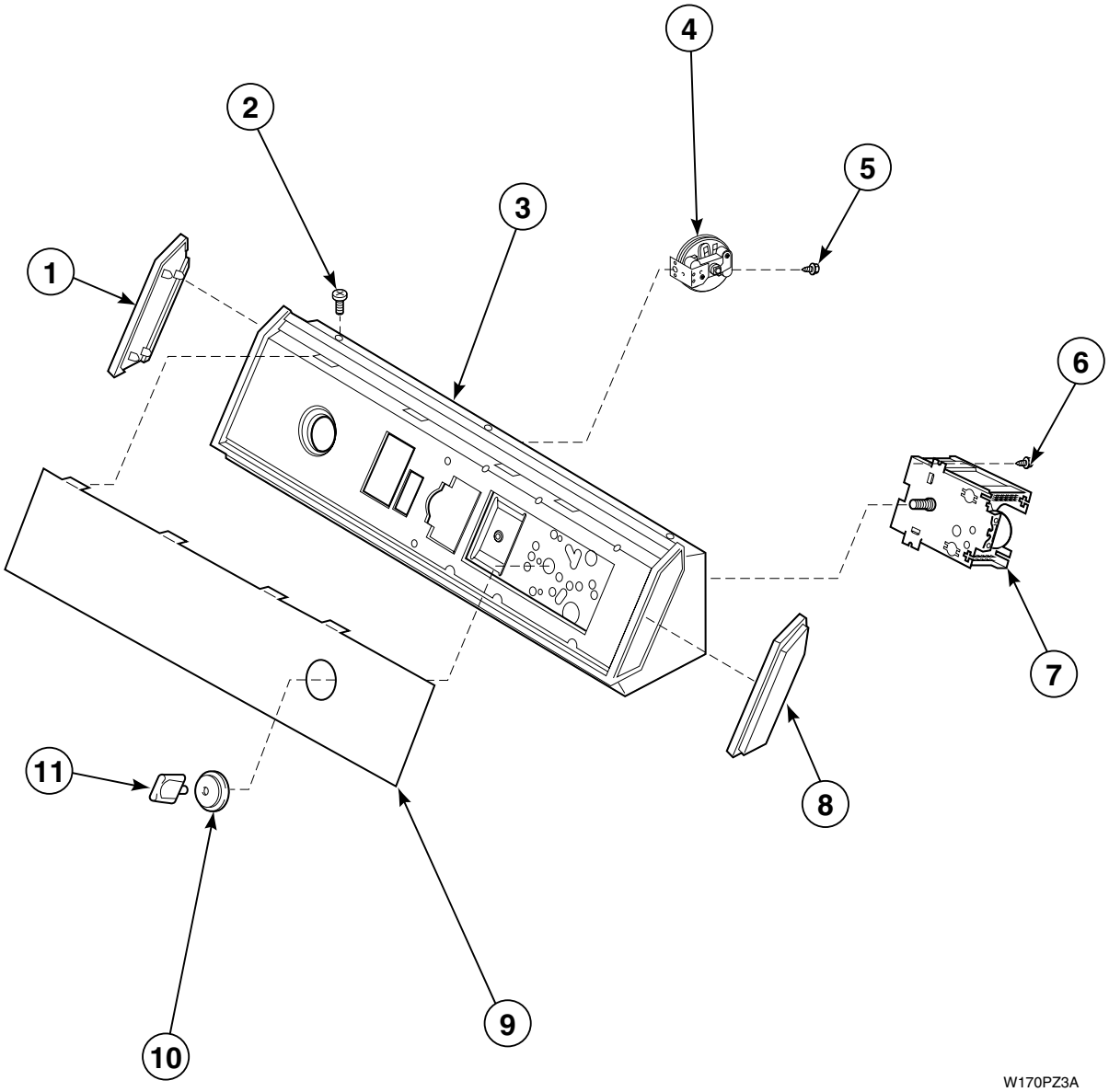

*** Add Letter To Designate Color. L – Almond W – White**

Graphic Panel, Control Hood and Controls

Model AWM190*2

REF	PART #	DESCRIPTION	COMMENTS
1	34460	End Cap	Left
2	31752	Screw	
3	31811	Control Hood Assembly	Through Serial No. 9511021616
	37844	Control Hood Assembly	Starting Serial No. 9511021617
4	35012	Pressure Switch	
5	31260	Screw	
6	23962	Screw	
7	31238	Timer	
8	34459	End Cap	Right
9	36622	Graphic Panel	
10	33817	Timer Knob Skirt	
11	33897	Timer Knob	

*** Add Letter To Designate Color. L – Almond W – White**

Graphic Panel, Control Hood and Controls

Models AWM2702*2, AWM371*2, AWM372*2 and AWM373*2

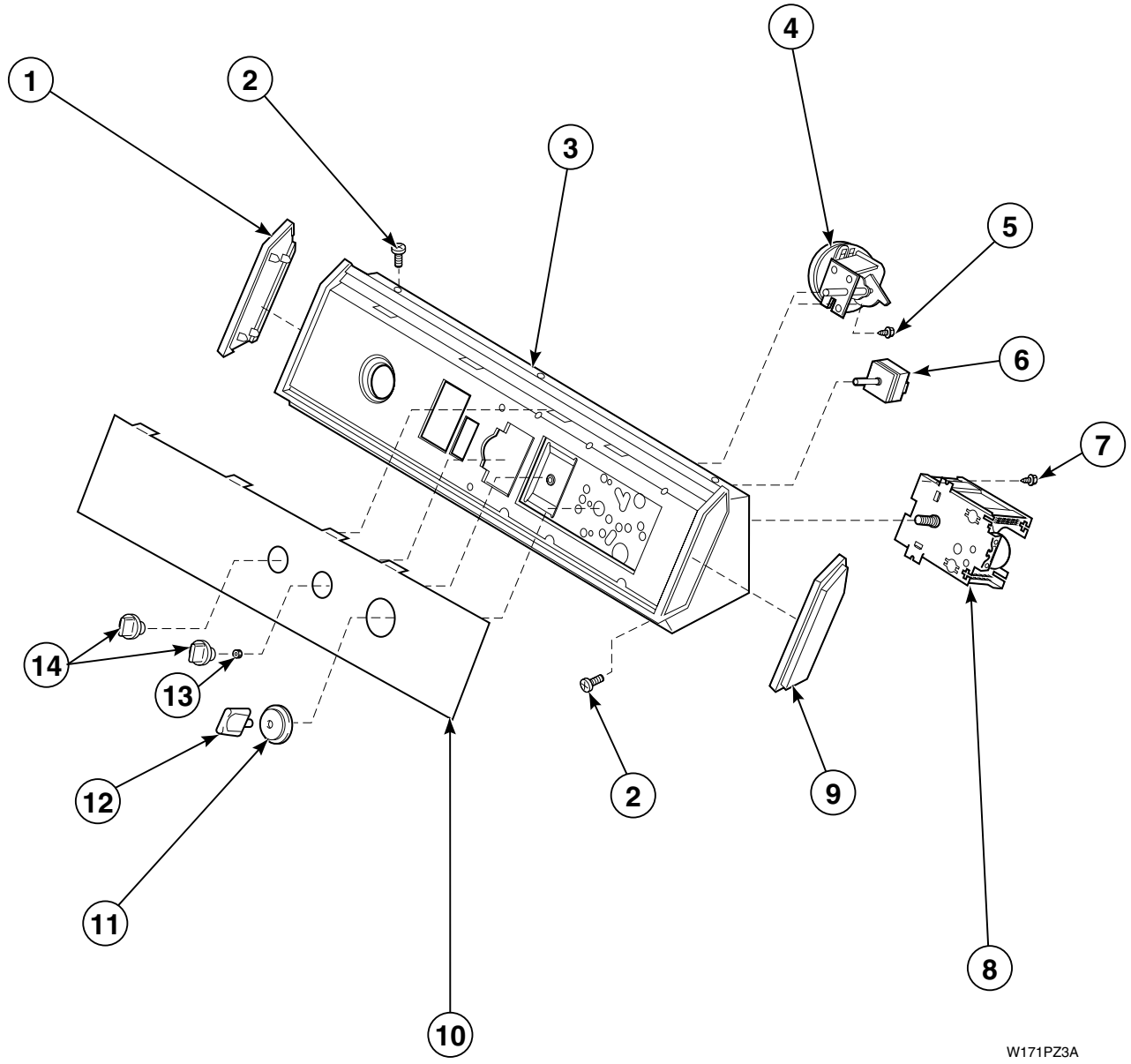

*** Add Letter To Designate Color. L – Almond W – White**

Graphic Panel, Control Hood and Controls

Models AWM2702*2, AWM371*2, AWM372*2 and AWM373*2

REF	PART #	DESCRIPTION	COMMENTS
1	31249	End Cap	Left
2	32993	Screw	
3	36295	Control Hood Assembly	Through Serial No. 9511021616; N/A
	37845	Control Hood Assembly	Starting Serial No. 9511021617
4	39035	Pressure Switch	Model AWM270*2
	39032	Pressure Switch	All models except AWM270*2
5	31260	Screw	
6	21300	Temperature Switch	Through Serial No. 9511021616
	35115	Temperature Switch	Starting Serial No. 9511021617
7	23962	Screw	
8	31238	Timer	Model AWM270*2
	31239	Timer	All models except AWM270*2
9	31248	End Cap	Right
10	36629	Graphic Panel	Model AWM270*2; N/A
	36922W	Graphic Panel	Models AWM372*2 and AWM373*2
	37675W	Graphic Panel	Model AWM371*2; N/A
11	33818	Timer Knob Skirt	
12	33898W	Timer Knob	
13	57584	Nut	Through Serial No. 9511021616
14	33688	Control Knob Assembly	

*** Add Letter To Designate Color. L – Almond W – White**

N/A = Part no longer available

Graphic Panel, Control Hood and Controls

Models AWM290*2, AWM392*2 and AWM393*2

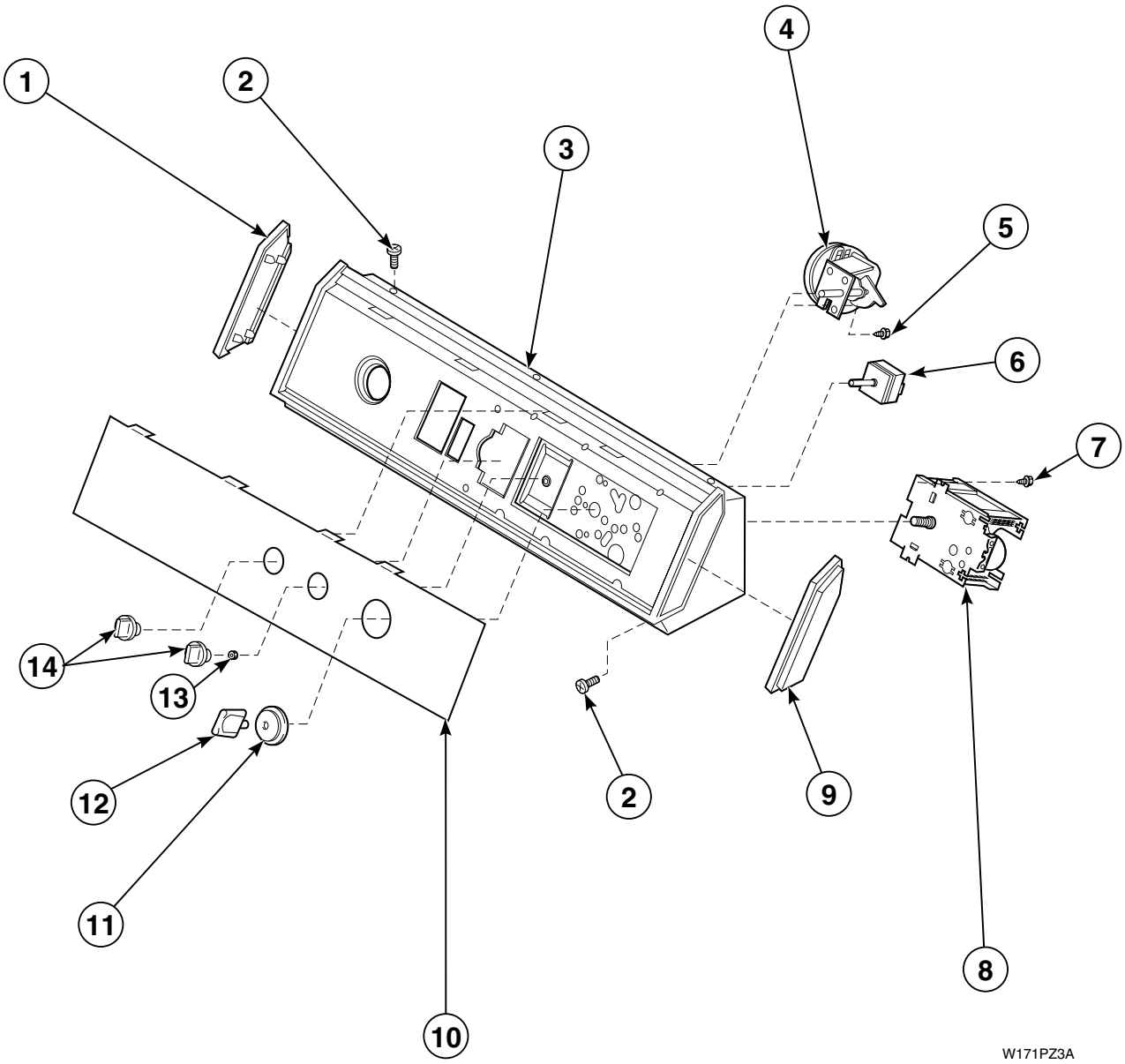

*** Add Letter To Designate Color. L – Almond W – White**

Graphic Panel, Control Hood and Controls

Models AWM290*2, AWM392*2 and AWM393*2

REF	PART #	DESCRIPTION	COMMENTS
1	31249	End Cap	Left
2	31752	Screw	
3	31811	Control Hood Assembly	Through Serial No. 9511021616
	37844	Control Hood Assembly	Starting Serial No. 9511021617
4	39035	Pressure Switch	Models AWM290*2
	39023	Pressure Switch	All models except AWM290*2
5	31260	Screw	
6	21300	Temperature Switch	Through Serial No. 9511021616
	35115	Temperature Switch	Starting Serial No. 9511021617
7	23962	Screw	
8	31238	Timer	Models AWM290*2
	31239	Timer	All models except AWM290*2
9	31248	End Cap	Right
10	36620	Graphic Panel	All models except AWM290*2
	36621	Graphic Panel	Models AWM290*2
11	33817	Timer Knob Skirt	
12	33897	Timer Knob	
13	57584	Nut	Through Serial No. 9511021616
14	33610	Control Knob Assembly	

*** Add Letter To Designate Color. L – Almond W – White**

Graphic Panel, Control Hood and Controls

Models AWM472*2, AWM473*2 and AWM573*2

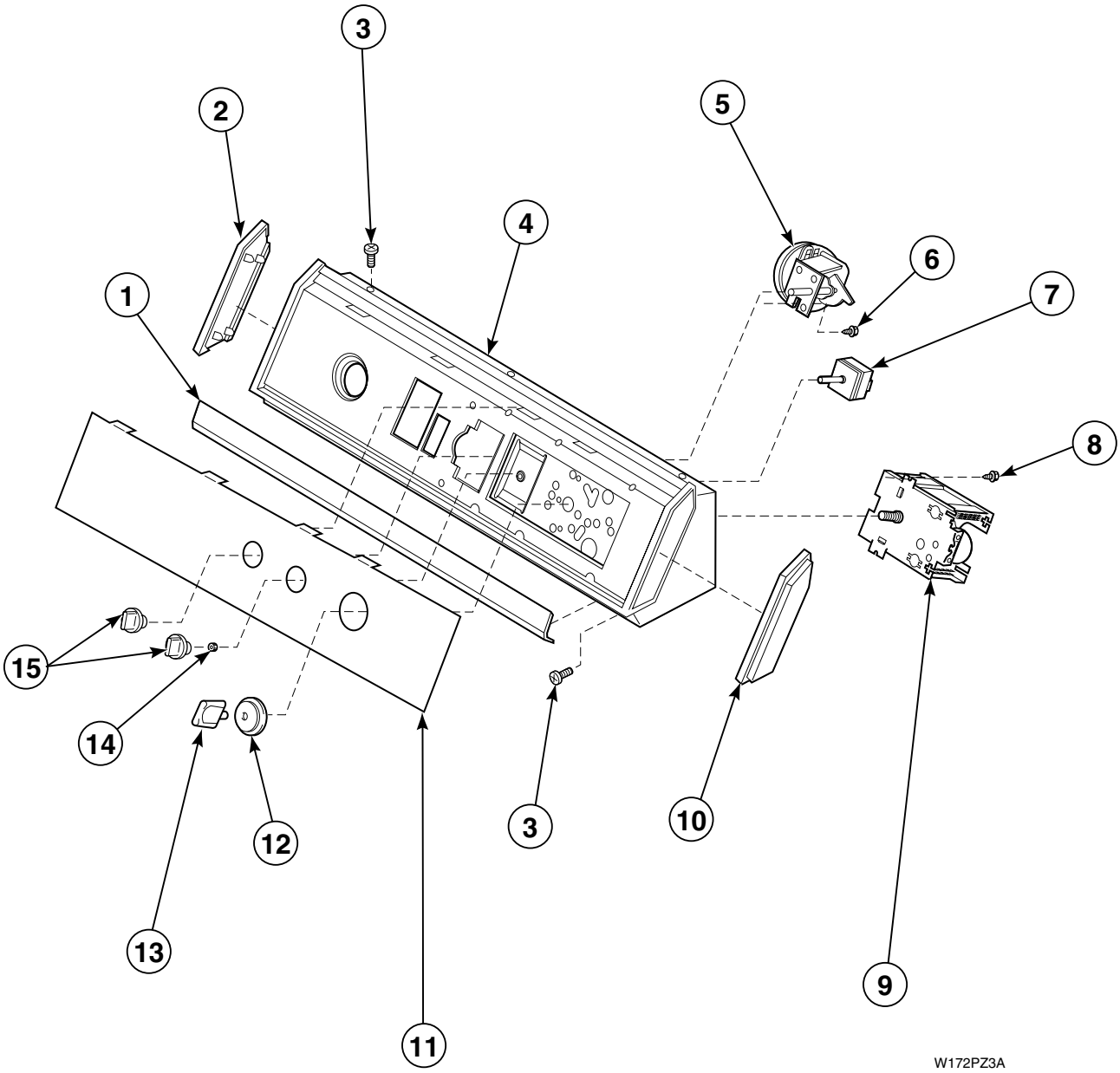

*** Add Letter To Designate Color. L – Almond W – White**

Graphic Panel, Control Hood and Controls

Models AWM472*2, AWM473*2 and AWM573*2

REF	PART #	DESCRIPTION	COMMENTS
1	33123R	Trim Strip	
2	31249	End Cap	Left
3	32993	Screw	
4	36295	Control Hood Assembly	Through Serial No. 9511021616
	37845	Control Hood Assembly	Starting Serial No. 9511021617
5	39023	Pressure Switch	
6	31260	Screw	
7	21300	Temperature Switch	Models AWM472*2 and AWM473*2; Through Serial No. 951021616
	32189	Temperature Switch	Model AWM573*2; Through Serial No. 951021616
	35115	Temperature Switch	Models AWM472*2 and AWM473*2; Starting Serial No. 9511021617
	36335	Temperature Switch	Models AWM573*2; Starting Serial No. 9511021617
8	23962	Screw	
9	31239	Timer	Models AWM472*2 and AWM473*2
9	36608	Timer	Model AWM573*2
10	31248	End Cap	Right
11	36619	Graphic Panel	Models AWM472*2 and AWM473*2
	36921W	Graphic Panel	Model AWM573*2
12	33818	Timer Knob Skirt	
13	33898W	Timer Knob	
14	57584	Nut	Through Serial No. 9511021616
15	33688	Control Knob Assembly	

*** Add Letter To Designate Color. L – Almond W – White**

Graphic Panel, Control Hood and Controls

Model AWM593*2

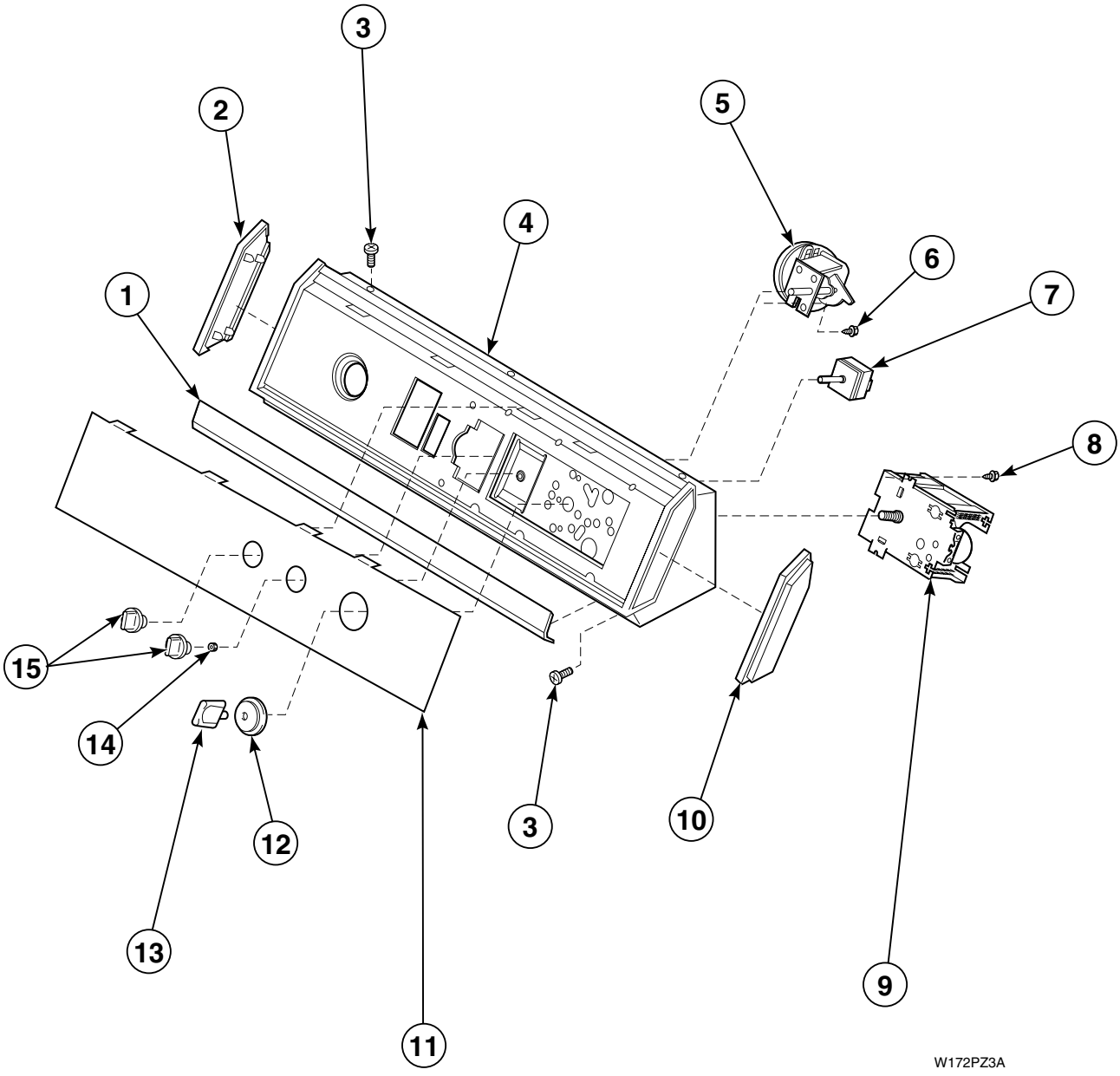

*** Add Letter To Designate Color. L – Almond W – White**

Graphic Panel, Control Hood and Controls

Model AWM593*2

REF	PART #	DESCRIPTION	COMMENTS
1	33123R	Trim Strip	
2	31249	End Cap	Left
3	31752	Screw	
4	31811	Control Hood Assembly	Through Serial No. 9511021616
	37844	Control Hood Assembly	Starting Serial No. 9511021617
5	39032	Pressure Switch	
6	31260	Screw	
7	32189	Temperature Switch	Through Serial No. 9511021616
	36335	Temperature Switch	Starting Serial No. 9511021617
8	23962	Screw	
9	36608	Timer	
10	31248	End Cap	Right
11	36618	Graphic Panel	
12	33817	Timer Knob Skirt	
13	33897	Timer Knob	
14	57584	Nut	Through Serial No. 9511021616
15	33610	Control Knob Assembly	

*** Add Letter To Designate Color. L – Almond W – White**

Cabinet Top, Loading Door and Control Rear Panel

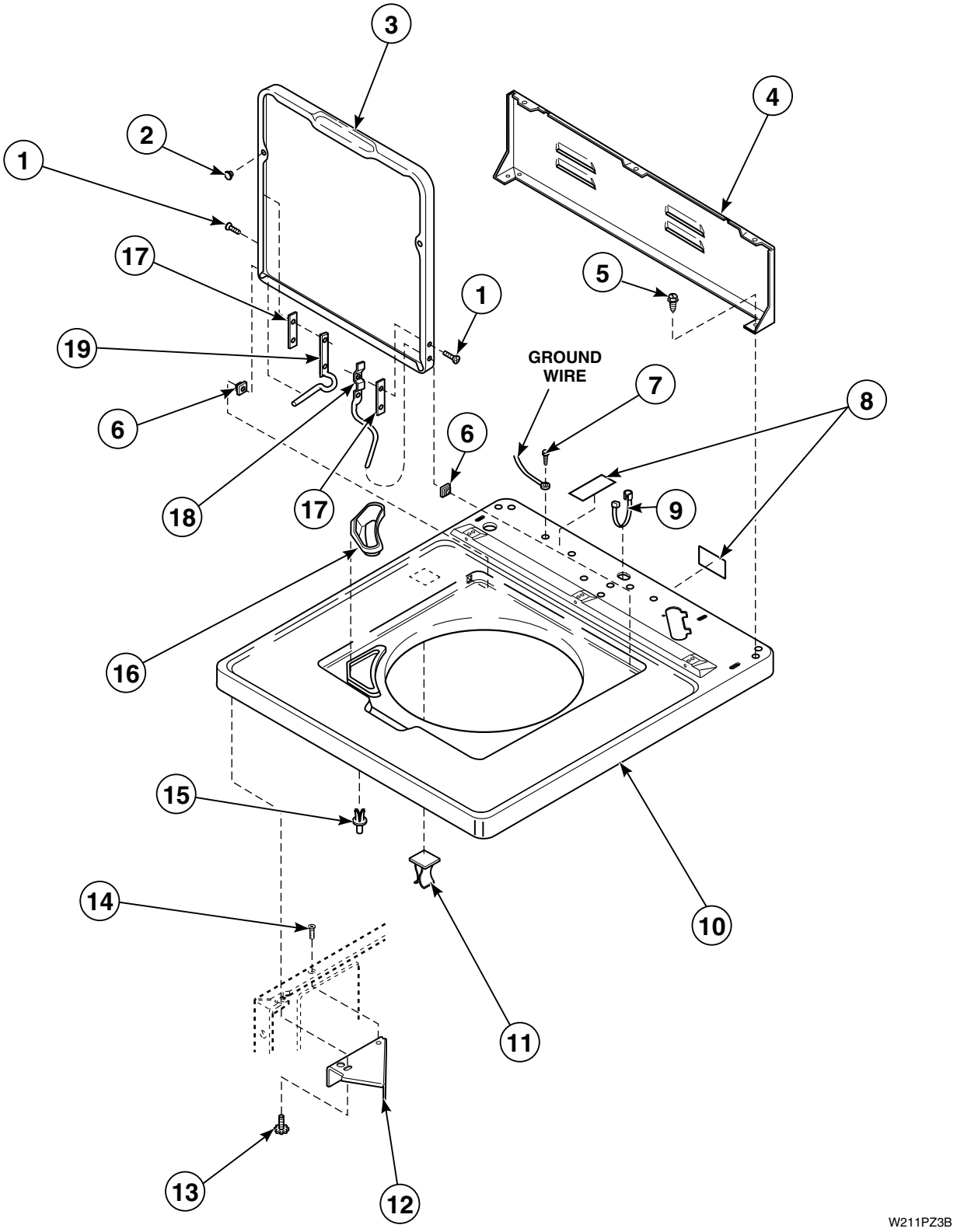

Cabinet Top, Loading Door and Control Rear Panel

REF	PART #	DESCRIPTION	COMMENTS
	26594P	Silicon Lubricant	Apply small amount to items 11 and 19; 2 oz. tube
1	34337	Screw	
2	21685	Bumper	
3	33541*P	Loading Door	
4	37782	Control Hood Rear Panel	
5	23962	Screw	
6	33446	Bushing	
7	52909	Screw	
8	24903	Sticker	
9	38384	Strain Relief	
10	34902*P	Cabinet Top	
11	36519	Clip	
12	36034	Director Bracket	
13	33562	Screw	
14	36035	Screw	
15	56534	Rivet	
16	34776	Bleach Dispenser	Not used on model AWM190*2
17	34338	Gasket	Through Serial No. 9511056682
18	36437	Hinge	Right
19	36513	Hinge	Left

*** Add Letter To Designate Color. L – Almond W – White**

Out-of-Balance Switch

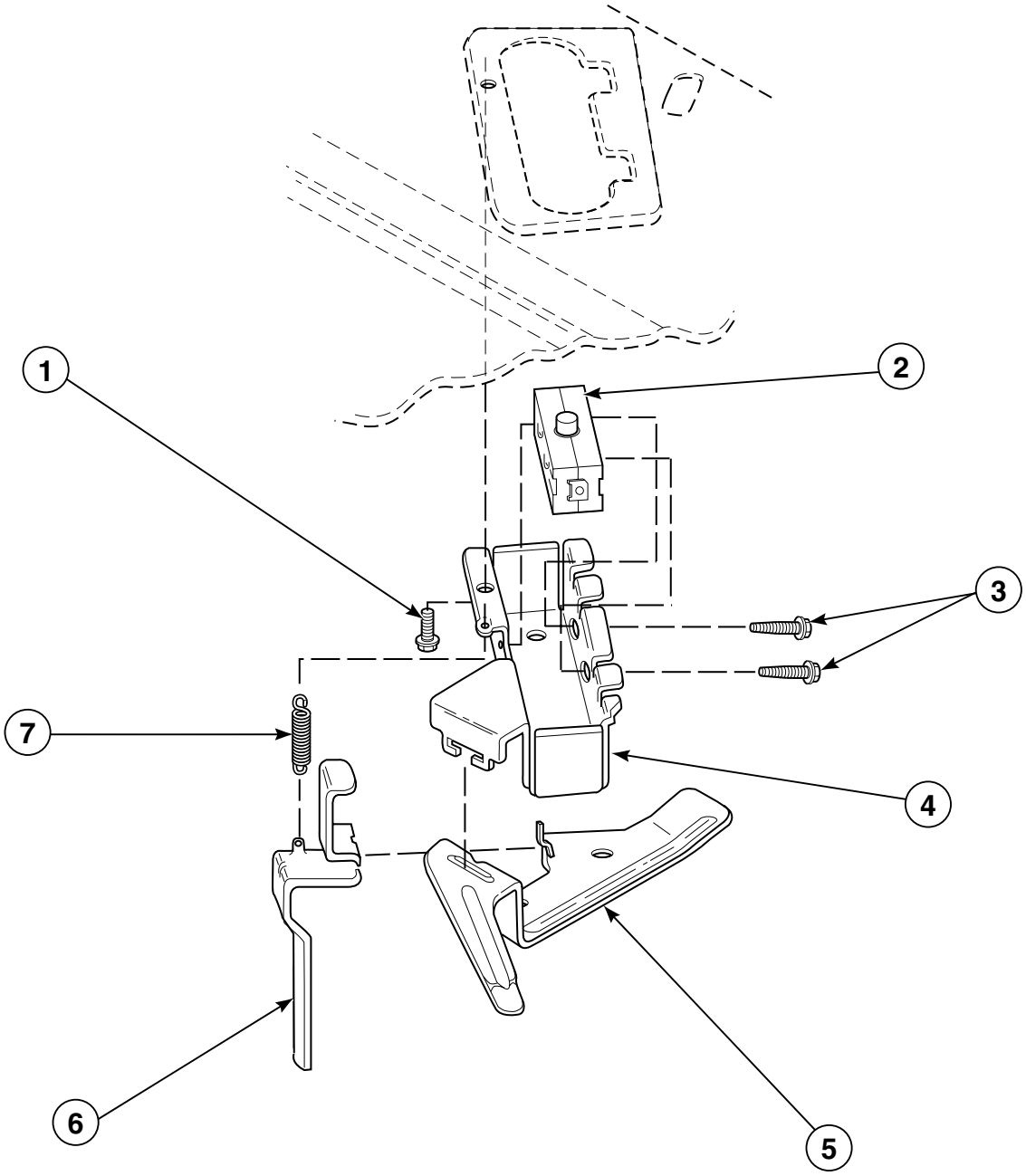

W246PZ3C

Out-of-Balance Switch

REF	PART #	DESCRIPTION	COMMENTS
1	23962	Screw	
2	33445	Switch	
3	36510	Screw	
4	36497P	Switch Holder Kit	Includes (2) item 3
5	33441	Actuator Arm	
6	33442	Lever	
7	33443	Spring	

Motor, Mounting Bracket, Belt, Pump and Idler Assembly

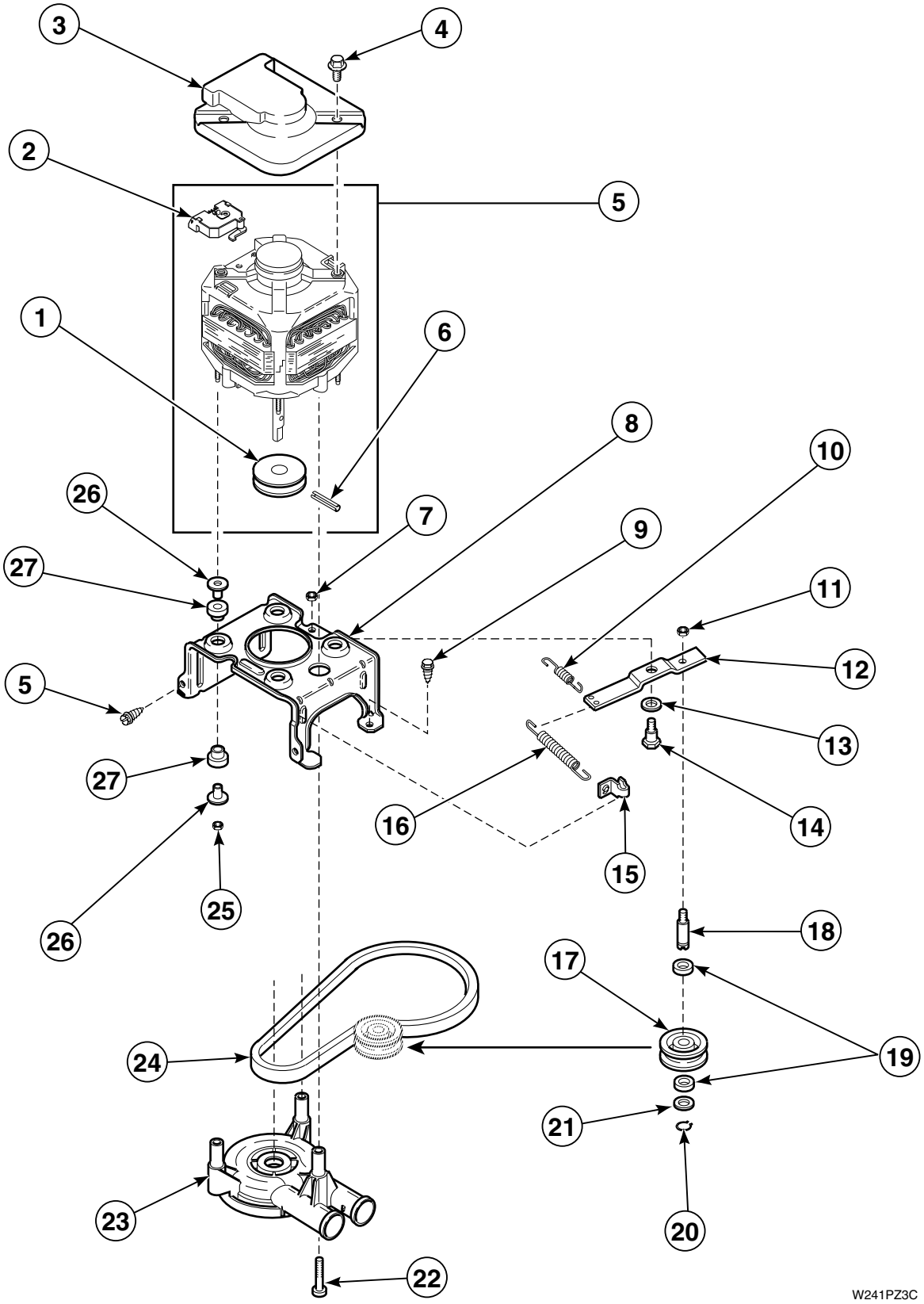

Motor, Mounting Bracket, Belt, Pump and Idler Assembly

REF	PART #	DESCRIPTION	COMMENTS
1	27171	Motor Pulley	
2	35632	Motor Switch	
3	34754	Motor Shield	
4	36639	Screw	
5	37891	Motor	2 Speed motor
	38036P	Motor	1 Speed motor
6	23750	Roll Pin	N/A
7	52566	Locknut	
8	34890	Motor Mounting Bracket	Through Serial No. 9502022146; N/A
	37415	Motor Mounting Bracket	Starting Serial No. 9507005925
	37415P	Motor Mounting Bracket	Staring Serial No. 9502022147 and continuing through Serial No. 9507005924
9	503661	Screw	
10	30620	Helper Spring	Through Serial No. 9506091526
11	28803	Locknut	
12	31054	Idler Lever	Through Serial No. 9507005924
	37443	Idler Lever	Starting Serial No. 9507005925
13	81392	Washer	
14	27229	Shoulder Bolt	
15	28849	Clip	
16	37366	Idler Lever Spring	Through Serial No. 9507005924
	37606	Idler Lever Spring	Starting Serial No. 9507005925
17	28800	Idler Pulley	
18	28802	Idler Shaft	
19	29443	Washer	Felt
20	23748	Retainer Ring	
21	52549	Washer	Nylatron
22	34565	Screw	
23	36863P	Pump Assembly	
24	28808	Belt	Agitate and spin
25	35423	Nut	
26	34791	Motor Mount Post	
27	34788	Motor Mount	Rubber

N/A = Part no longer available

Inlet Hose, Fill Hose, Mixing Valve and Mounting Bracket

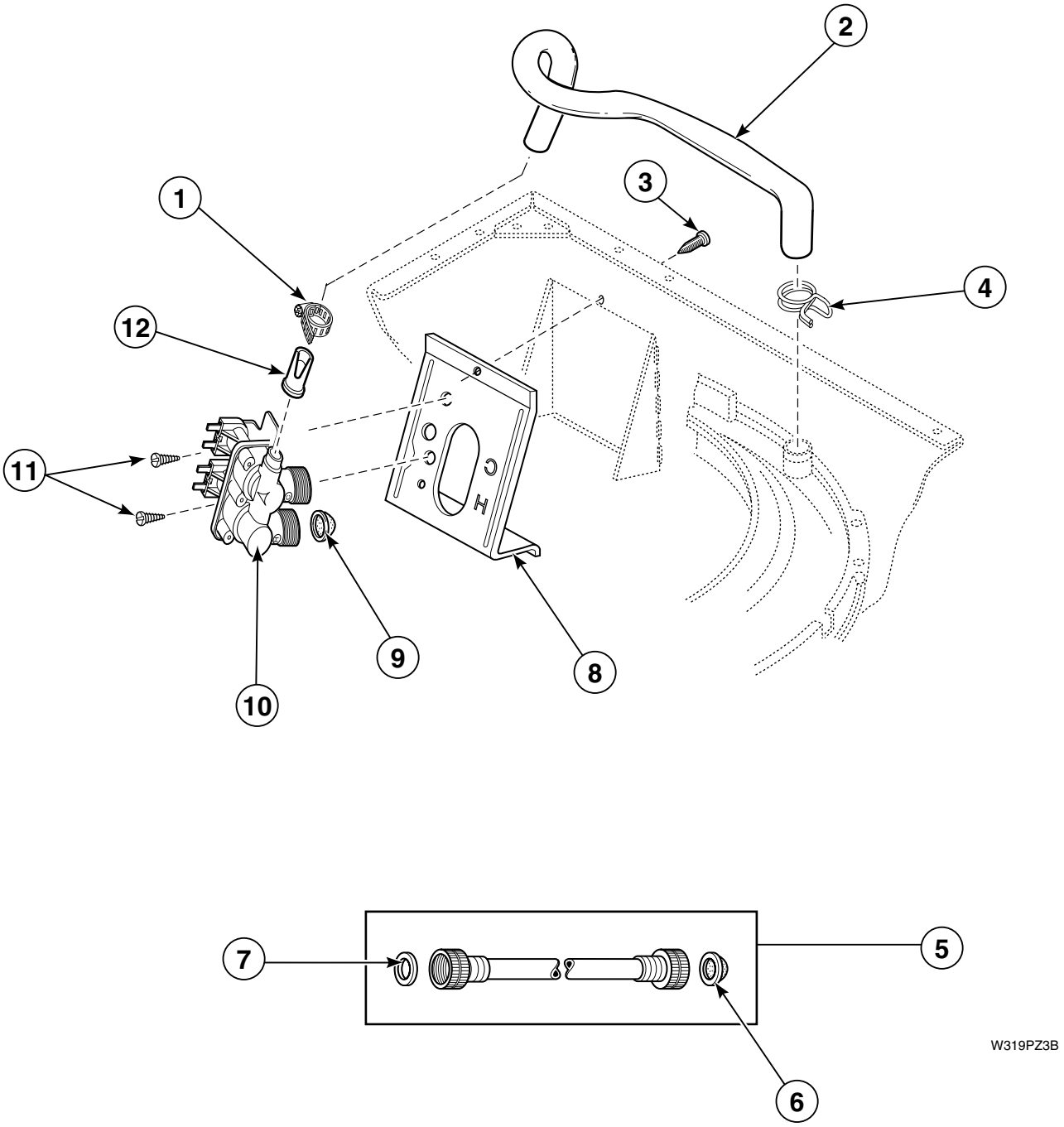

Inlet Hose, Fill Hose, Mixing Valve and Mounting Bracket

REF	PART #	DESCRIPTION	COMMENTS
1	36801	Hose Clamp	
2	33562	Screw	
3	35874	Filler Hose	
4	29210	Hose Clamp	
5	20617	Inlet Hose	8 feet
	20618	Inlet Hose	10 feet
	28330P	Inlet Hose	4 feet; Includes item 6 and 7
6	28605	Filter Washer	Faucet connection; N/A
7	20290	Hose Washer	Valve connection
8	39407	Mixing Valve Mounting Bracket	
9	34500	Backflow Preventer	
10	F270200	Inlet Screen	
11	34963	Mixing Valve	
12	23962	Screw	

N/A = Part no longer available

Agitator, Drive Bell, Seal Kit, Washtub and Hub

Models AWM190*2, AWM270*2 and AWM290*2

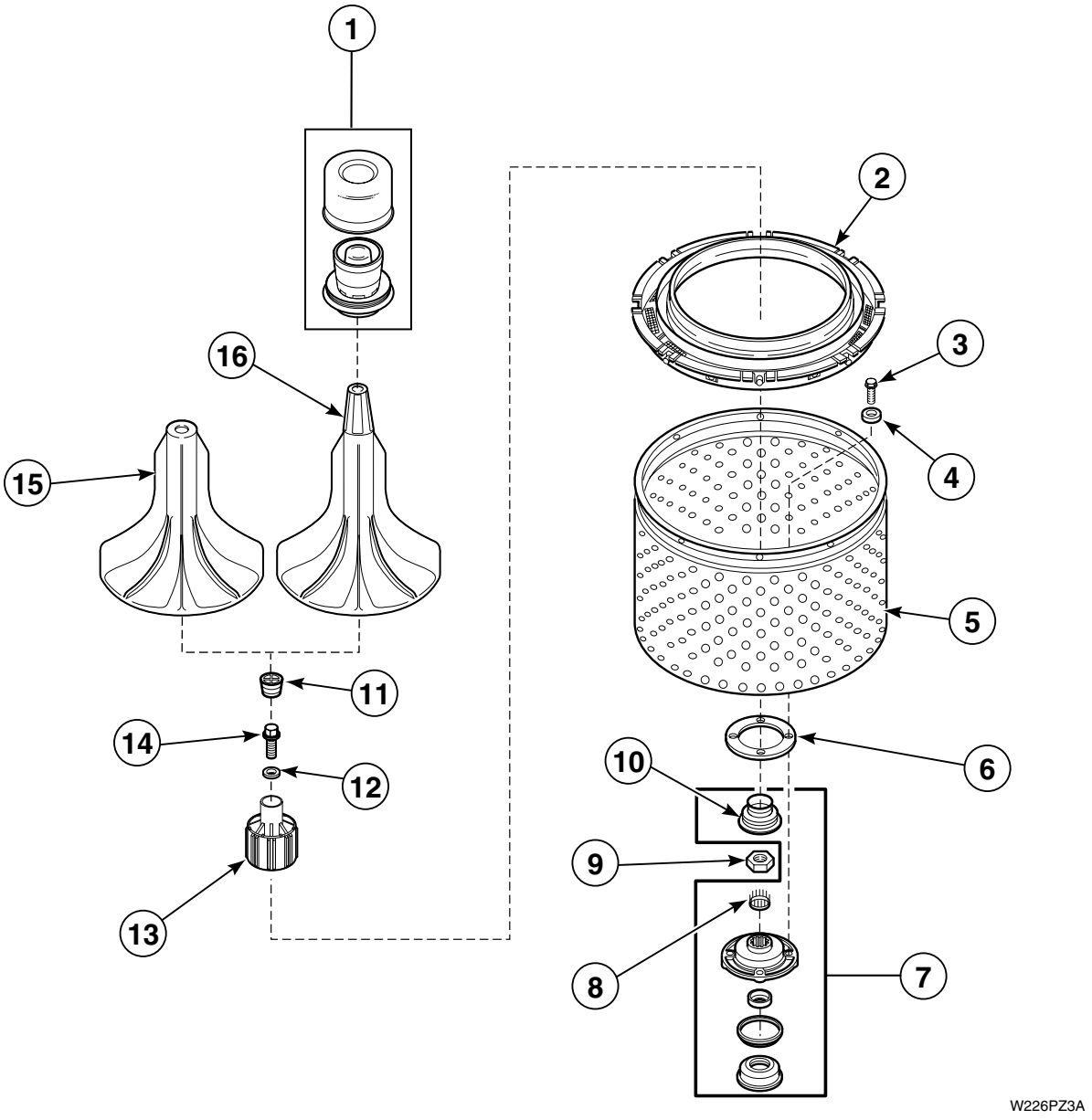

*** Add Letter To Designate Color. L – Almond W – White**

Agitator, Drive Bell, Seal Kit, Washtub and Hub

Models AWM190*2, AWM270*2 and AWM290*2

REF	PART #	DESCRIPTION	COMMENTS
1	33510	Fabric Softener Dispenser	
2	35035	Clothes Guard	
3	27202	Screw	
4	28094	Gasket	Rubber washer
5	39252P	Washtub	Blue Porcelain
6	39122	Gasket	
7	495P3	Hub and Seal Kit	Includes 27615P Sealant, 32857 Cover Gasket and 36443P Drive Bell and Seal Kit
8	29728	Splined Insert	
9	29220	Locknut	
10	36425	Seal	
11	36511	Plug	
12	36472	O-Ring	
13	39508P	Drive Bell and Seal Kit	Includes items 8, 10, 11, 12, 14 and Drive Bell
14	34288	Shoulder Screw	
15	33513	Agitator	Model AWM190*2
16	33514	Agitator	Models AWM270*2 and AWM290*2

*** Add Letter To Designate Color. L – Almond W – White**

Agitator, Drive Bell, Seal Kit, Washtub and Hub

All models except AWM190*2, AWM270*2 and AWM290*2

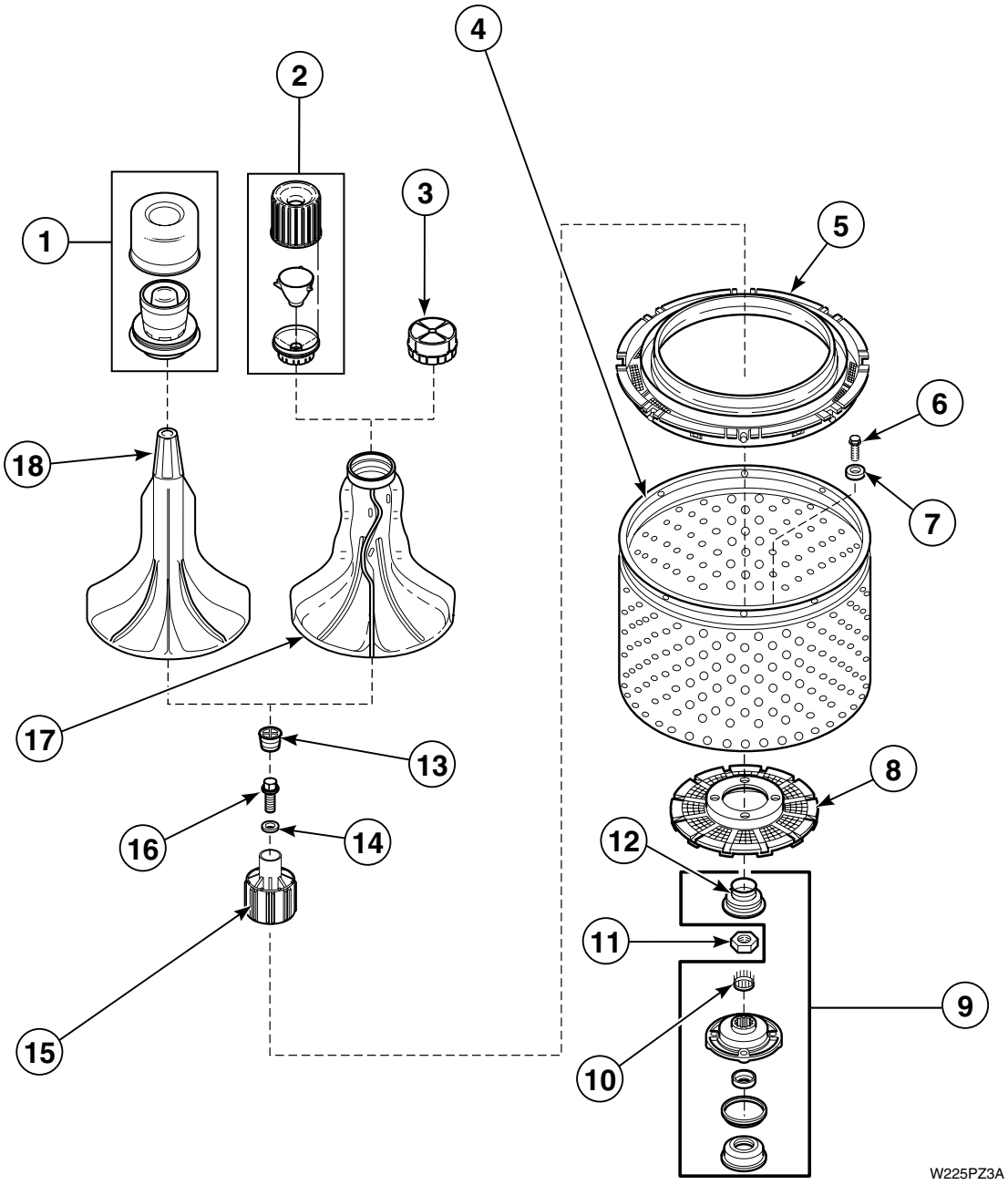

Agitator, Drive Bell, Seal Kit, Washtub and Hub

All models except AWM190*2, AWM270*2 and AWM290*2

REF	PART #	DESCRIPTION	COMMENTS
1	33510	Fabric Softener Dispenser	
2	36542	Fabric Softener Dispenser	
3	36515	Agitator Cap	
4	719P3	Washtub	Stainless Steel; All models except AWM371*2, AWM372*2, AWM392*2 and AWM472*2
	32940P	Washtub	White Porcelain; Models AWM372*2, AWM392*2 and AWM472*2
	39387P	Washtub	Stainless Steel; Model AWM371*2
5	35035	Clothes Guard	
6	27202	Cap Screw	
7	28094	Gasket	Rubber washer
8	39371	Lint Filter	
9	495P3	Hub and Seal Kit	Includes 27615P Sealant, 32857 Cover Gasket and 36443P Drive Bell and Seal Kit
10	29728	Splined Insert	
11	29220	Locknut	
12	36425	Seal	
13	36511	Plug	
14	36472	O-Ring	
15	39508P	Drive Bell and Seal Kit	Includes items 13, 16 and drive bell
16	39432	Shoulder Screw	
17	33174	Agitator	Wavy vane; Models AWM472*2, AWM473*2, AWM573*2 and AWM593*2
18	33514	Agitator	Straight vane; Models AWM371*2, AWM372*2, AWM373*2, AWM392*2 and AWM393*2

*** Add Letter To Designate Color. L – Almond W – White**

Outer Tub, Cover and Pressure Hose

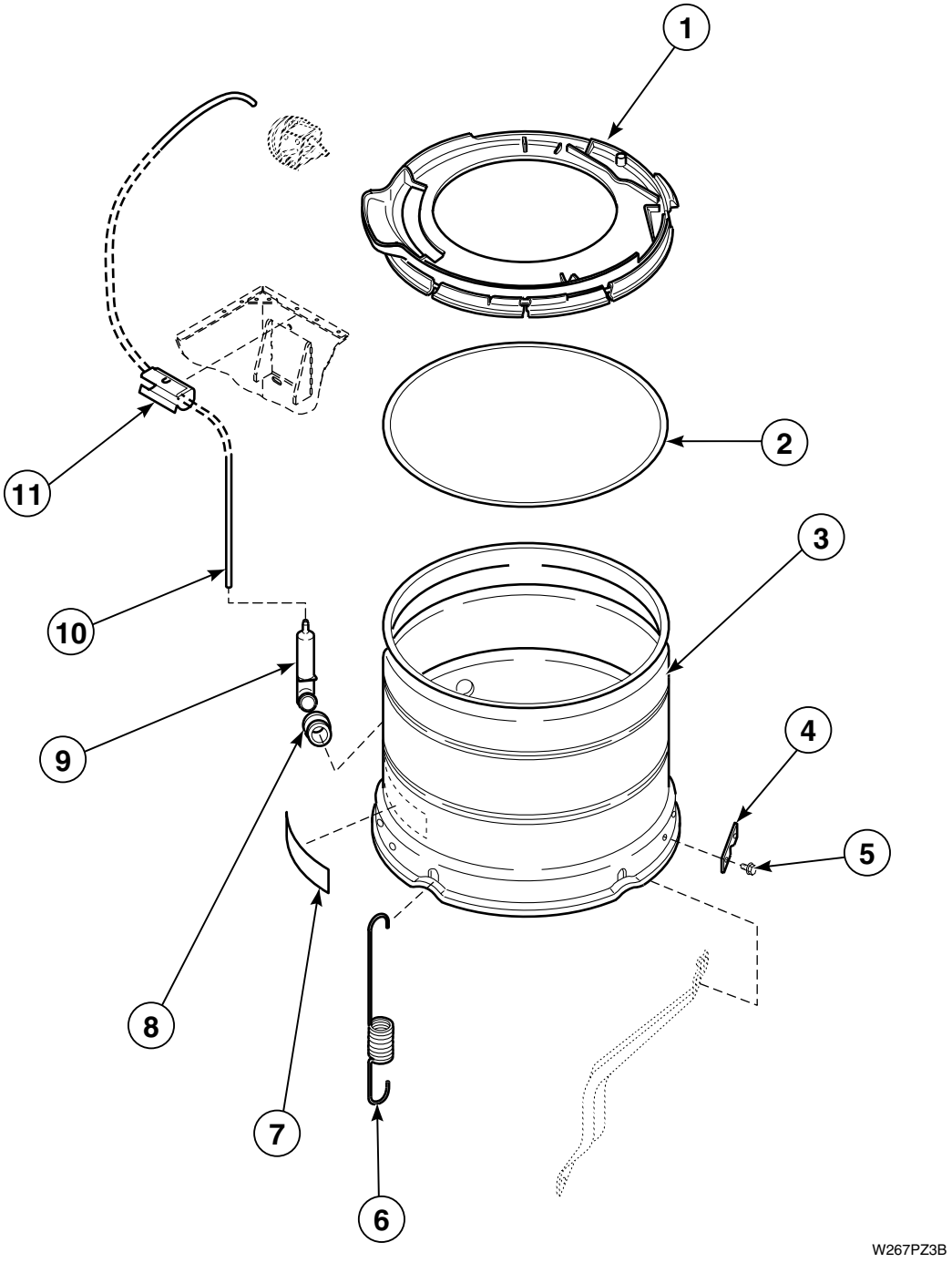

Outer Tub, Cover and Pressure Hose

REF	PART #	DESCRIPTION	COMMENTS
1	36025P	Outer Tub Cover Kit	Includes item 2 and Part No. 21036 Clip
2	32857	Outer Tub Cover Gasket	
3	34438P	Outer Tub	All Models except AWM190*2, AWM270*2, AWM290*2 and AWM371*2
	34439P	Outer Tub	Models AWM190*2, AWM270*2, AWM290*2 and AWM371*2
4	27926	Leg Plate	
5	35369	Screw	
6	35947	Centering Spring	Models AWM190*2, AWM270*2, AWM290*2 and AWM371*2
	35948	Centering Spring	All Models except AWM19082, AWM270*2, AWM290*2 and AWM371*2
7	500049	Sticker	
8	29175	Grommet	
9	30907	Pressure Bulb	
10	39125	Tubing	
11	36985	Clip	

*** Add Letter To Designate Color. L – Almond W – White**

Drain Hose and Siphon Break

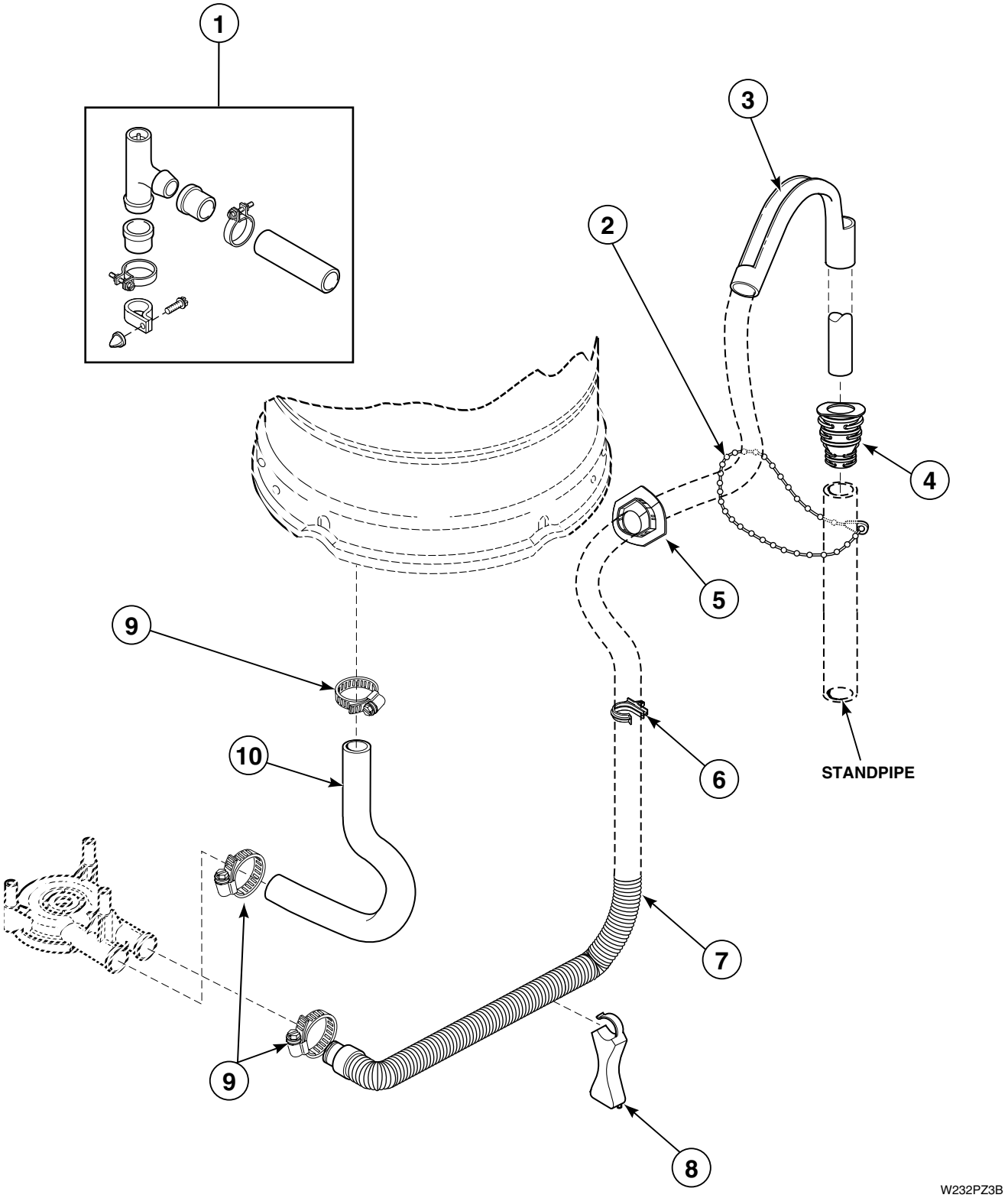

Drain Hose and Siphon Break

REF	PART #	DESCRIPTION	COMMENTS
1	562P3	Siphon Break Kit	Siphon Break Kit MUST be installed in drain hose if drain receptacle is lower than cabinet top of washer
2	33489	Beaded Tie-Down Strap	
3	33615	Drain Hose Sleeve	
4	36878	Standpipe Adapter	
5	32219	Drain Hose Strain Relief	
6	36014	Hose Retainer Clip	
7	39950	Drain Hose	
8	35487	Hose Support	Through Serial No. 9502022146
	36522	Hose Support	Starting Serial No. 9502022147
9	36802	Hose Clamp	#20
10	35752	Tub-to-Pump Hose	Models AWM190*2, AWM270*2, AWM290*2 and AWM371*2
	35753	Tub-to-Pump Hose	All Models except AWM190*2, AWM270*2, AWM290*2 and AWM371*2

*** Add Letter To Designate Color. L – Almond W – White**

Transmission Assembly and Balancing Ring

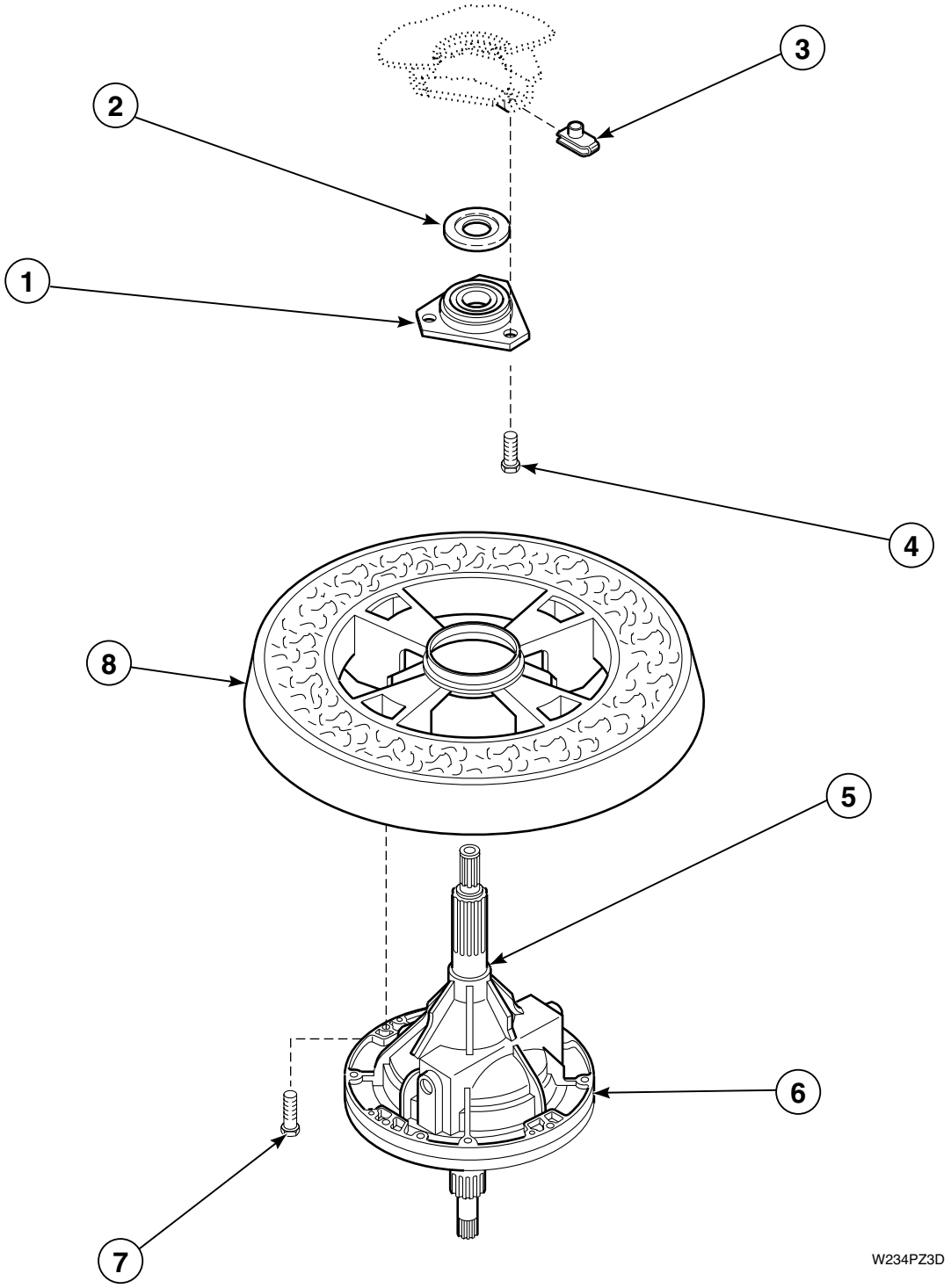

Transmission Assembly and Balancing Ring

REF	PART #	DESCRIPTION	COMMENTS
1	27182	Bearing Housing Assembly	
2	27187	Flinger	Through Serial No. 9510053576
3	27222	Retainer Nut	
4	36991	Cap Screw	
5	27604P	Anti-Seize Compound	Apply to this area of both the upper and lower transmission tubes
6	34526P	Transmission Assembly	
7	37047	Screw	N/A
8	34731	Balancing Ring	

N/A = Part no longer available

34526P Transmission Assembly

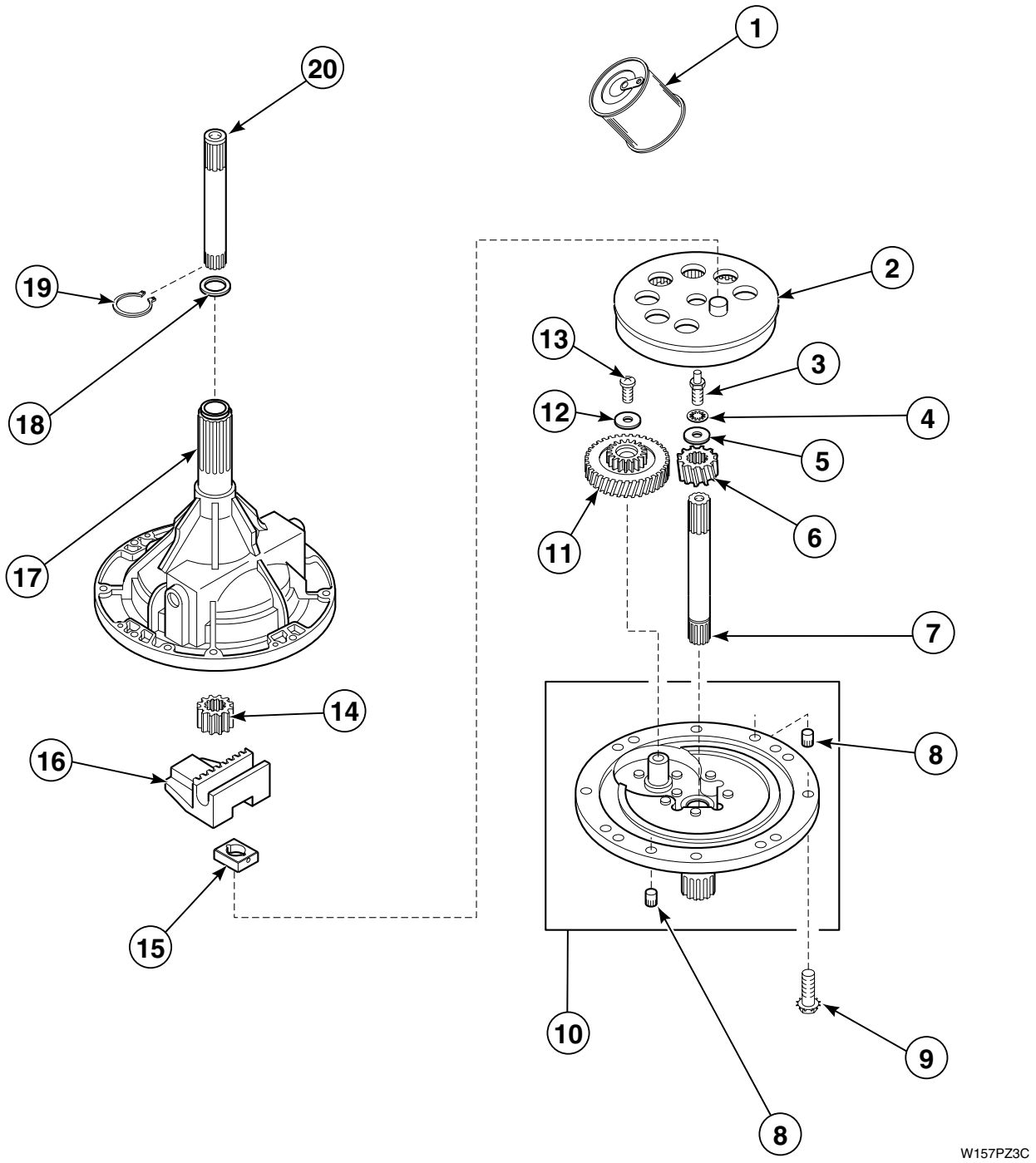

34526P Transmission Assembly

REF	PART #	DESCRIPTION	COMMENTS
	37577P	Sealant	Use between transmission case and cover
1	27243P	Transmission Oil	1 fill
2	26577	Internal Gear	
3	27030	Special Screw	
4	21456	Lockwasher	
5	26509	Washer	
6	36562	Drive Pinion	
7	34853	Input Shaft	
8	27172	Dowel Pin	Through Serial No. 9604069377
9	32814	Screw	
10	38290	Transmission Cover Assembly	
11	29161	Reduction Gear	
12	29260	Washer	
13	29273	Screw	
14	27003	Agitator Pinion	
15	26493	Slide	
16	31526	Rack	
17	33223	Transmission Case Assembly	
18	35092	Washer	
19	27197	Retainer Ring	
20	36570	Output Shaft	

Bearing Housing, Brake, Pulley and Pivot Dome

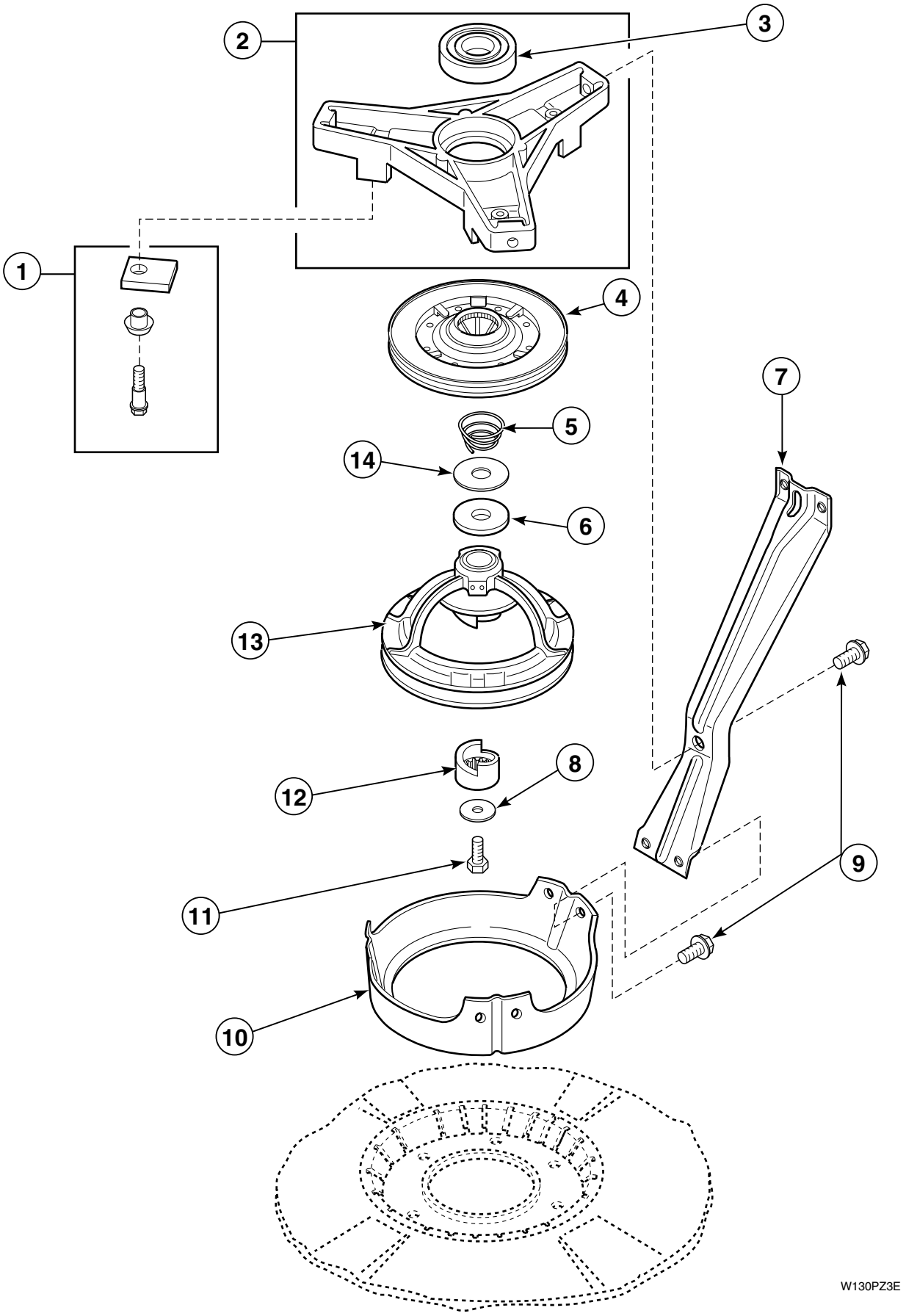

Bearing Housing, Brake, Pulley and Pivot Dome

REF	PART #	DESCRIPTION	COMMENTS
	26594P	Silicon Lubricant	Apply small amount to each new brake pad
1	548P3	Brake Pad Kit	Includes sleeves, screws and 3 pads
2	35746	Bearing Housing Assembly	
3	28944R	Bearing	
4	38505P	Brake	
5	33435	Spring	Through Serial No. 9606029040
6	27015	Washer	Thick
7	34471	Support Leg	All models except AWM190*2, AWM270*2, AWM290*2 and AWM371*2
	34792	Support Leg	Models AWM190*2, AWM270*2, AWM290*2 and AWM371*2
8	26509	Washer	
9	35369	Screw	
10	34470	Pivot Dome	
11	27220	Screw	
12	27018	Helix	
13	34921	Pulley Assembly	All models except AWM190*2, AWM270*2, AWM290*2 and AWM371*2
	34923	Pulley Assembly	Models AWM190*2, AWM270*2, AWM290*2 and AWM371*2
14	35535	Washer	Thin

*** Add Letter To Designate Color. L – Almond W – White**

Front Panel, Base Assembly and Cabinet Assembly

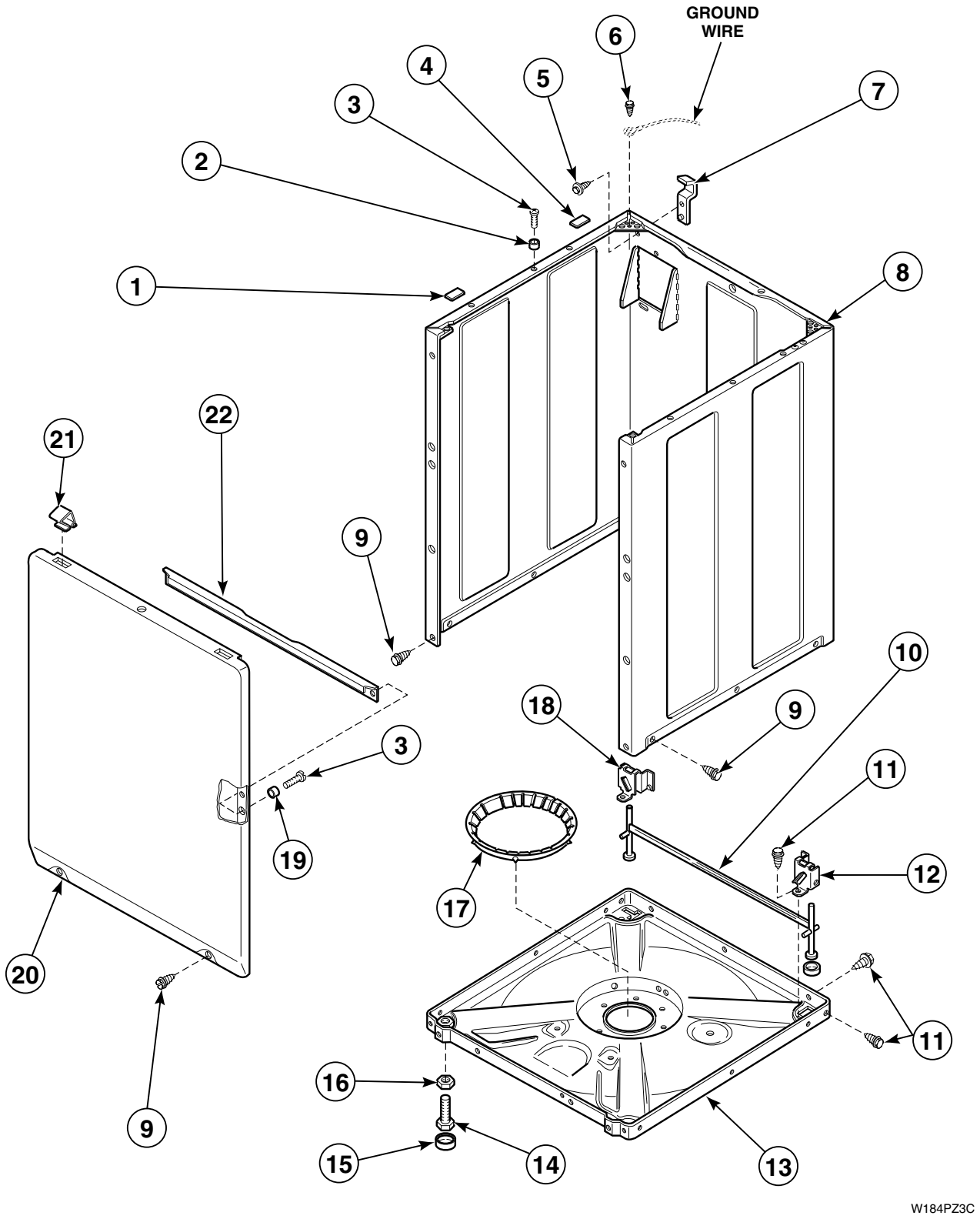

Front Panel, Base Assembly and Cabinet Assembly

REF	PART #	DESCRIPTION	COMMENTS
1	56128	Bumper Pad	Thin
2	56079	Guide Lug	
3	32671	Screw	
4	36226	Bumper Pad	Thick
5	51780	Screw	
6	23962	Screw	
7	27103	Hinge	
8	28612*P	Cabinet	
9	27196	Screw	
10	34443	Leveling Leg and Stabilizer Bar Assembly	
11	35148	Screw	
12	36036	Bracket	Right
13	34434P	Base	Through Serial No. 9502022146; Includes items 10, 11, 12, 17 and 18
	36599P	Base	Staring Serial No. 9502022147; Includes items 10, 11, 12, 17 and 18
14	34319	Leveling Leg	
15	34318	Rubber Foot	
16	21899	Locknut	
17	36108	Snubber Pad and Isolator Assembly	
18	36037	Bracket	Left
19	28102	Guide Lug	
20	34656*P	Front Panel	Includes items 21, 22 and attaching hardware
21	35865	Hold-Down Clip	
22	35097	Brace	

*** Add Letter To Designate Color. L – Almond W – White**

Mixing Valve and Motor Connection Blocks, Terminals and Terminal Extractor Tool

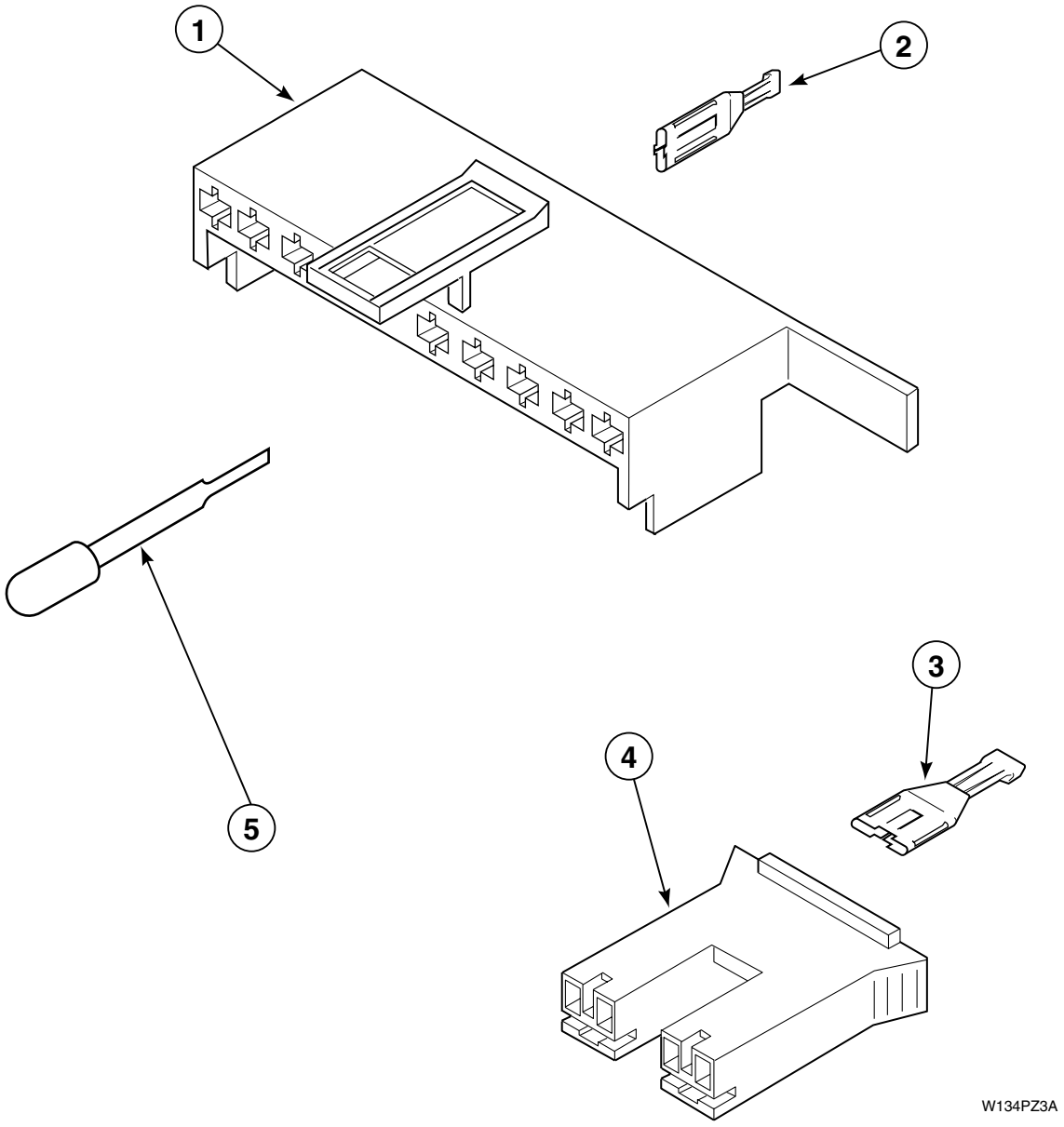

Mixing Valve and Motor Connection Blocks, Terminals and Terminal Extractor Tool

REF	PART #	DESCRIPTION	COMMENTS
	34529	Wiring Harness	Hood; Models AWM472*2 and AWM473*2
	34833	Wiring Harness	Hood; Models AWM573*2 and AWM593*2
	34971	Wiring Harness	Hood; Models AWM270*2, AWM290*2, AWM371*2, AWM372*2, AWM373*2, AWM392*2 and AWM393*2
	35048	Wiring Harness	Hood; Models AWM190*2; N/A
	36278	Wiring Harness	Base
1	34677	Plug	Motor
2	00188	Terminal	Female; For 1 or 2 wire application
3	00121	Terminal	Female; 1/4 inch
4	34675	Mixing Valve	Natural
	34676	Mixing Valve	Red
5	283P4	Terminal Extractor Tool	

*** Add Letter To Designate Color. L – Almond W – White**

N/A = Part no longer available

Power Cord and Terminals

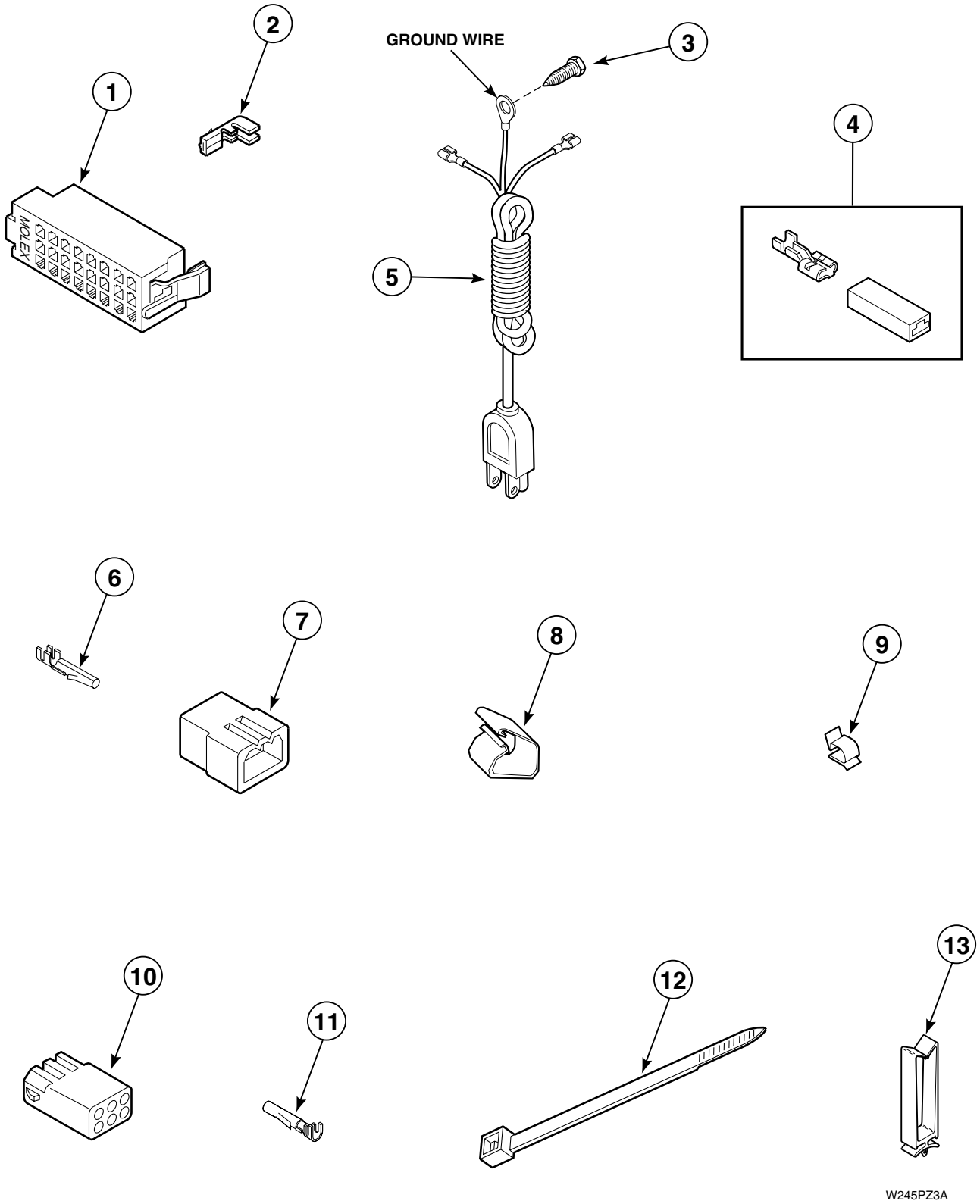

Power Cord and Terminals

REF	PART #	DESCRIPTION	COMMENTS
1	32746	Housing	Right
	34123	Housing	Left
2	00188	Terminal	Female; Used for 1 or 2 wire application
3	52909	Screw	
4	00234	Terminal	Female
5	34458	Power Cord	
6	00116	Terminal	Male
7	23033	Plug	9 circuit
	23041	Plug	6 circuit
	26302	Plug	1 circuit
8	35521	Harness Clip	
9	21036	Cable Clip	
10	26163	Receptacle	9 circuit
	26301	Receptacle	1 circuit
	26708	Receptacle	6 circuit
11	00117	Terminal	Female
12	55881	Harness	
13	36274	Harness Clip	

Terminals

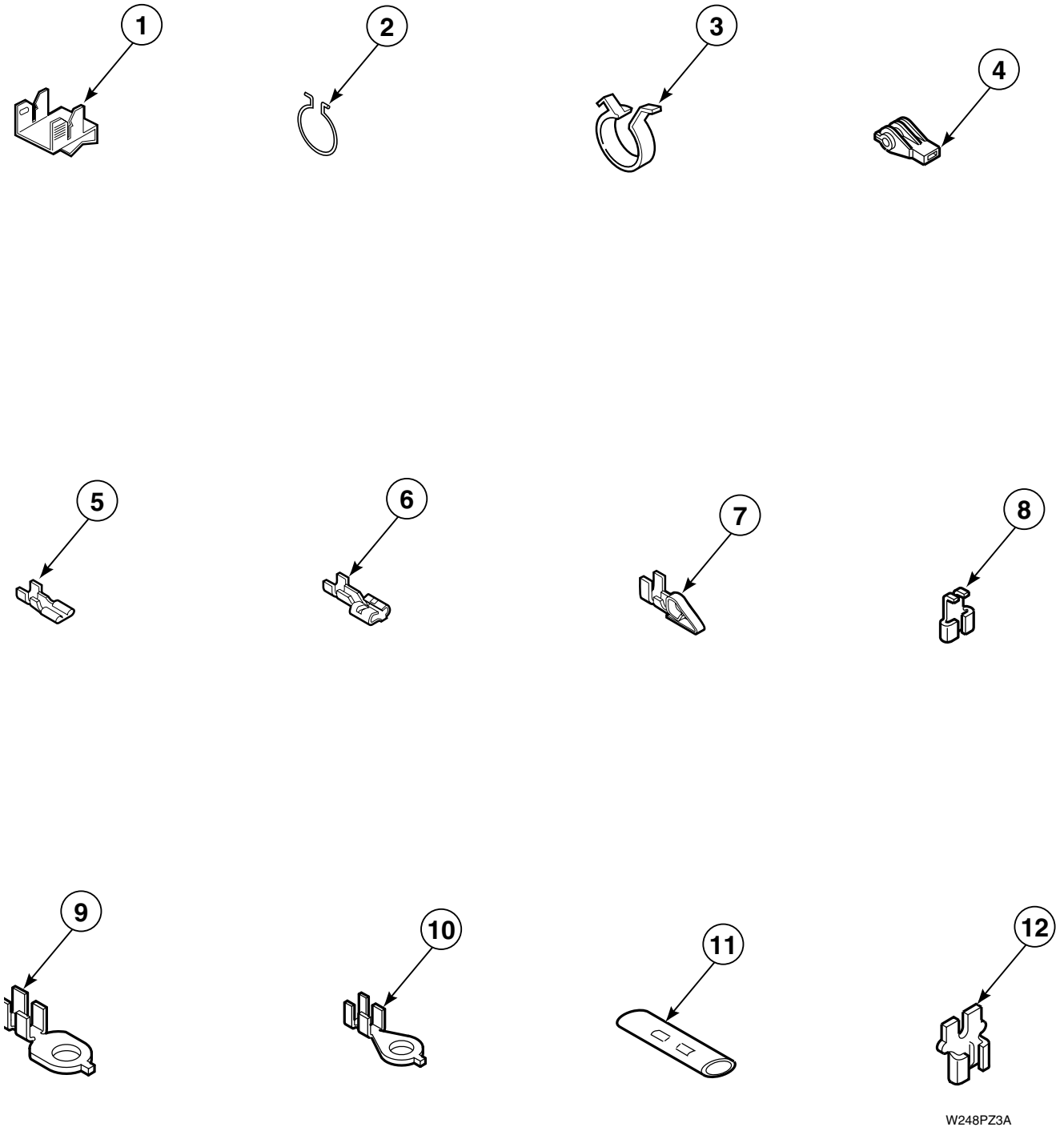

Terminals

REF	PART #	DESCRIPTION	COMMENTS
1	00161	Ground Clip	
2	51291	Wire Clip	
3	504034	Wire Clip	
4	70210	Plastic Insulator	
5	00112	Spade Terminal	Female; Small spade
6	00223	Spade Terminal	Large spade
7	00220	Spade Terminal	Female; 1/4 inch
8	00120	Terminal	Female
9	00113	Eyelet Terminal	1/4 inch ring
10	00110	Eyelet Terminal	Small shank
11	21091	Connector	(2) 1/4 inch male spades
12	29673	Double Connector	

Special Tools

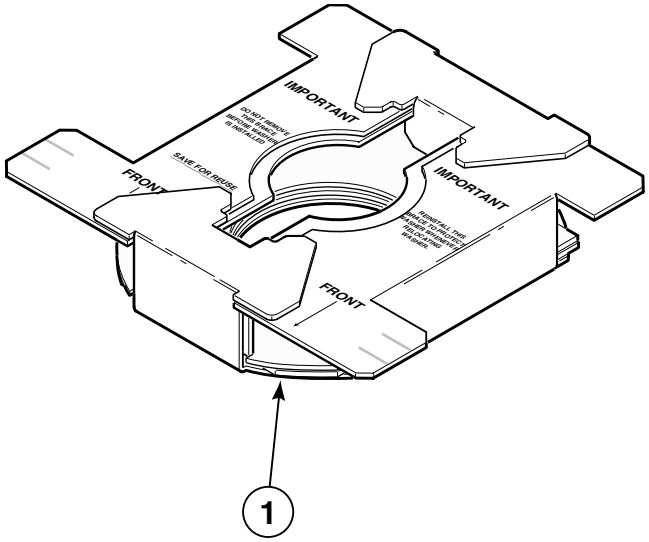

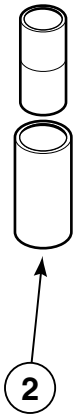

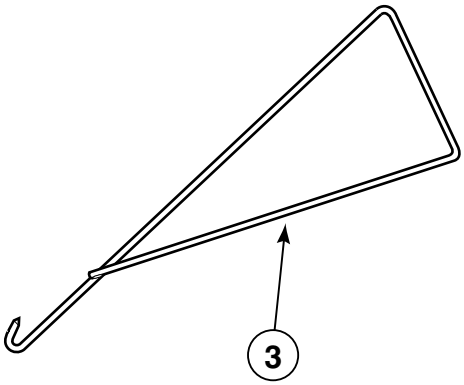

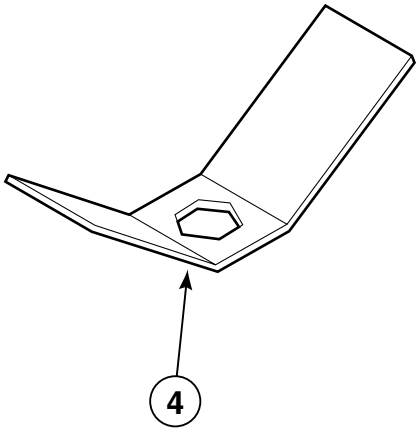

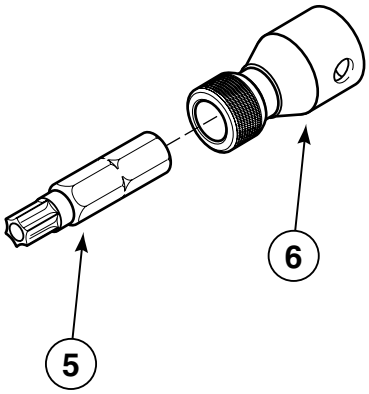

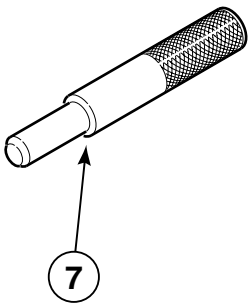

W309PZ3B

Special Tools

REF	PART #	DESCRIPTION	COMMENTS
	725P3	Tool Kit	Includes item 2, 3, 4, and Part No.'s 254P4P Hook, 273P4 Tool and 293P4 Tool
1	36926	Washer Shipping Brace	Install whenever moving washer; Remove before use; N/A
2	242P4	Brake Spring Installer	For installing brake spring; N/A
3	321P4	Spring Hook	For removal of centering springs from outer tub
4	306P4	Hex Wrench	For removal of locknut from washtub hub
5	282P4	T25 Torx Bit	For removal and installation of pump attaching screws
6	24161	Torx Bit Holder	3/8 inch drive
7	305P4	Transmission Pin Tool	2 required; Use pin tools in place of dowel pins when reassembling transmission cover and case.

N/A = Part no longer available

Special Tools

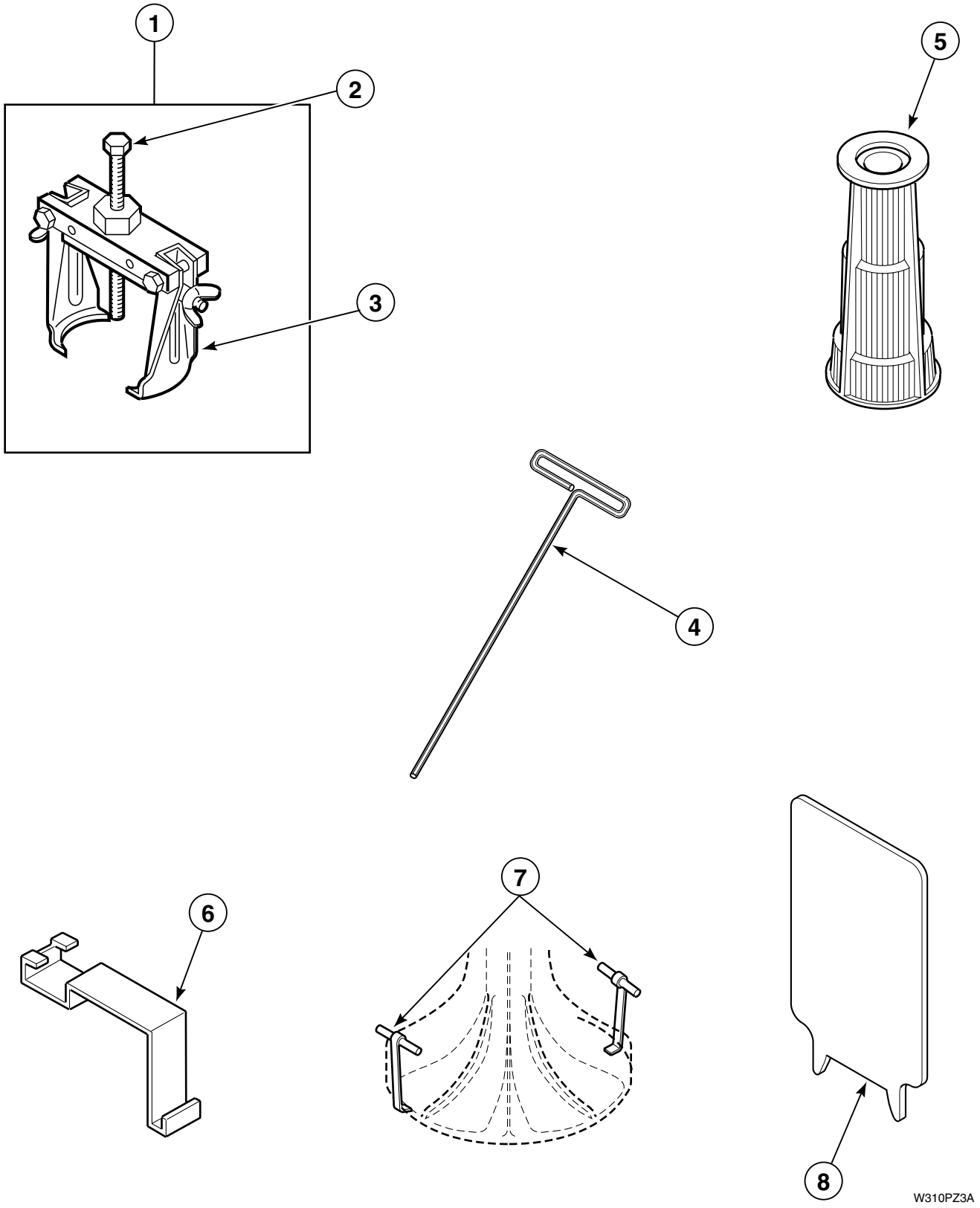

Special Tools

REF	PART #	DESCRIPTION	COMMENTS
	555P3	Tool Kit	Includes items 5, 6, 7 and Part No.'s 237P4, 242P4 and 289P4
1	294P4	Bell Tool	For removal and installation of drive bell to transmission shaft.
2	294P4B	Drive Bell Bolt	Use to update 253P4 Bell Tool
3	294P4A	Drive Bell Arms	Use to update 253P4 Bell Tool
4	291P4	T Handle Allen Wrench	For removal and installation of three pump assembly attaching screws
5	293P4	Seal Tool	For installation of 36425 Seal
6	273P4	Outer Tub Cover and Gasket Tool	Use to remove 36025P Outer Tub Cover from outer tub and to install 32857 Gasket in outer tub cover.
7	254P4P	Agitator Hooks	Set of 2; Use to remove agitator from drive bell
8	272P4	Switch Tool	Use for installing lid switch for models using 33440 Switch Holder

Wire Harnesses and Wires

Individual wires are not available separately. Order complete wire harness or order wire by the foot. See wire chart below.

MODEL NUMBER	BASE WIRE HARNESS PART NUMBER	HOOD WIRE HARNESS PART NUMBER
AWM190*2	36278	N/A
AWM270*2, AWM290*2, AWM371*2, AWM372*2, AWM373*2, AWM392*2 and AWM393*2	36278	34971
AWM472*2 and AWM473*2	36278	34529
AWM573*2 and AWM593*2	36278	34833

*** Add Letter To Designate Color. L – Almond W – White**

N/A = Part no longer available

Order the individual wire color and gauge by the part number listed below. Order wire by the foot and terminals and connectors as required. It is recommended when applying terminals to wires that the terminals be soldered to the wires.

IMPORTANT: Always replace wires with proper gauge.

PART NUMBER	WIRE GAUGE	WIRE COLOR
45001	18 Gauge Wire	Black
45380	12 Gauge Wire	Orange

Production Literature

Part numbers do not include revision levels.

MODEL NUMBER	USE AND CARE PART NUMBER
AWM190*2	36732
AWM270*2 and AWM290*2	N/A
AWM371*2, AWM372*2, AWM373*2, AWM392*2 and AWM393*2	N/A
AWM472*2 and AWM473*2	36729
AWM573*2 and AWM593*2	N/A

N/A = Part no longer available

Parts Index

A

Actuator Arm
33441 17

Agitator
33174 25
33513 23
33514 ..... 23, 25

Agitator Cap
36515 25

Agitator Hooks
254P4P 47

Agitator Pinion
27003 33

Anti-Seize Compound
27604P 31

B

Backflow Preventer
34500 21

Balancing Ring
34731 31

Base
34434P 37
36599P 37

Beaded Tie-Down Strap
33489 29

Bearing
28944R 35

Bearing Housing Assembly
27182 31
35746 35

Bell Tool
294P4 47

Belt
28808 19

Bleach Dispenser
34776 15

Brace
35097 37

Bracket
36036 37
36037 37

Brake
38505P 35

Brake Pad Kit
548P3 35

Brake Spring Installer
242P4 45

Bumper
21685 15

Bumper Pad
36226 37
56128 37

Bushing
33446 15

C

Cabinet
28612*P 37

Cabinet Top
34902*P 15

Cable Clip
21036 41

Cap Screw
27202 25
36991 31

Centering Spring
35947 27
35948 27

Clip
28849 19
36519 15
36985 27

Clothes Guard
35035 ..... 23, 25

Connector
21091 43

Control Hood Assembly
31811 ..... 5, 9, 13
36295 ..... 7, 11
37844 ..... 5, 9, 13
37845 ..... 7, 11

Control Hood Rear Panel
37782 15

Control Knob Assembly
33610 ..... 9, 13
33688 ..... 7, 11

D

Director Bracket
36034 15

Double Connector
29673 43

Dowel Pin
27172 33

Drain Hose
39950 29

Drain Hose Sleeve
33615 29

Drain Hose Strain Relief
32219 29

Drive Bell and Seal Kit
39508P 23, 25

Drive Bell Arms
294P4A 47

Drive Bell Bolt
294P4B 47

Drive Pinion
36562 33

E

18 Gauge Wire
45001 48

End Cap
31248 ..... 7, 9, 11, 13
31249 ..... 7, 9, 11, 13
34459 5
34460 5

Eyelet Terminal
00110 43
00113 43

F

Fabric Softener Dispenser
33510 ..... 23, 25
36542 25

Filler Hose
35874 21

Filter Washer
28605 21

Flinger
27187 31

Front Panel
34656*P 37

G

Gasket
28094 ..... 23, 25
34338 15
39122 23

Graphic Panel
36618 13
36619 11
36620 9
36621 9
36622 5
36629 7
36921W 11
36922W 7
37675W 7

Grommet
29175 27

Ground Clip
00161 43

Guide Lug
28102 37
56079 37

H

Harness
55881 41

Harness Clip
35521 41
36274 41

Helix
27018 35

Helper Spring
30620 19

Hex Wrench
306P4 45

Hinge
27103 37
36437 15
36513 15

Hold-Down Clip
35865 37

Hose Clamp
29210 21
36801 21
36802 29

Hose Retainer Clip
36014 29

Hose Support
35487 29
36522 29

Hose Washer
20290 21

Housing
32746 41
34123 41

Hub and Seal Kit
495P3 ..... 23, 25

I

Idler Lever
31054 19
37443 19

Idler Lever Spring
37366 19
37606 19

Idler Pulley
28800 19

Idler Shaft
28802 19

Inlet Hose
20617 21
20618 21
28330P 21

Inlet Screen
F270200 21

Input Shaft
34853 33

Internal Gear
26577 33

L

Leg Plate
27926 27

Leveling Leg
34319 37

Leveling Leg and Stabilizer Bar Assembly
34443 37

Lever
33442 17

Lint Filter
39371 25

Loading Door
33541*P 15
Locknut
21899 37
28803 19
29220 ..... 23, 25
52566 19
Lockwasher
21456 33

M

Mixing Valve
34675 39
34676 39
34963 21
Mixing Valve Mounting Bracket
39407 21
Molex Terminal
00188 39
Motor
37891 19
38036P 19
Motor Mount
34788 19
Motor Mount Post
34791 19
Motor Mounting Bracket
34890 19
37415 19
37415P 19
Motor Pulley
27171 19
Motor Shield
34754 19
Motor Switch
35632 19

N

Nut
35423 19
57584 ..... 7, 9, 11, 13

O

O-Ring
36472 ..... 23, 25
Outer Tub
34438P 27
34439P 27
Outer Tub Cover and Gasket Tool
273P4 47
Outer Tub Cover Gasket
32857 27
Outer Tub Cover Kit
36025P 27
Output Shaft
36570 33

P

Pivot Dome
34470 35
Plastic Insulator
70210 43
Plug
23033 41
23041 41
26302 41
34677 39
36511 ..... 23, 25
Power Cord
34458 41
Pressure Bulb
30907 27
Pressure Switch
35012 5
39023 ..... 9, 11
39032 ..... 7, 13
39035 ..... 7, 9
Pulley Assembly
34921 35
34923 35
Pump Assembly
36863P 19

R

Rack
31526 33
Receptacle
26163 41
26301 41
26708 41
Reduction Gear
29161 33
Retainer Nut
27222 31
Retainer Ring
23748 19
27197 33
Rivet
56534 15
Roll Pin
23750 19
Rubber Foot
34318 37

S

Screw
23962 ..... 5, 7, 9, 11, 13, 15, 17, 21, 37
27196 37
27202 23
27220 35
29273 33
31260 ..... 5, 7, 9, 11, 13
31752 ..... 5, 9, 13
32671 37
32814 33
32993 ..... 7, 11
33562 ..... 15, 21
34337 15
34565 19
35148 37
35369 ..... 27, 35
36035 15
36510 17
36639 19
37047 31
503661 19
51780 37
52909 ..... 15, 41

Seal
36425 ..... 23, 25

Seal Tool
293P4 47

Sealant
37577P 33

Shoulder Bolt
27229 19

Shoulder Screw
34288 23
39432 25

Silicon Lubricant
26594P 15, 35

Siphon Break Kit
562P3 29

Slide
26493 33

Snubber Pad and Isolator Assembly
36108 37

Space Terminal
00121 39

Spade Terminal
00112 43
00220 43
00223 43

Special Screw
27030 33

Splined Insert
29728 ..... 23, 25

Spring
33435 35
33443 17

Spring Hook
321P4 45

Standpipe Adapter
36878 29

Sticker
24903 15
500049 27

Strain Relief
38384 15

Support Leg
34471 35
34792 35

Switch
33445 17

Switch Holder Kit
36497P 17

Switch Tool
272P4 47

T

T25 Torx Bit
282P4 45

T Handle Allen Wrench
291P4 47

Temperature Switch
21300 ..... 7, 9, 11
32189 ..... 11, 13
35115 ..... 7, 9, 11
36335 ..... 11, 13

Terminal
00116 41
00117 41
00120 43
00188 41

Terminal and Housing Assembly
00234 41

Terminal Extractor Tool
283P4 39

Timer
31238 ..... 5, 7, 9
31239 ..... 7, 9, 11
36608 ..... 11, 13

Timer Knob
33897 ..... 5, 9, 13
33898W 7, 11

Timer Knob Skirt
33817 ..... 5, 9, 13
33818 ..... 7, 11

Tool Kit
555P3 47
725P3 45

Torx Bit Holder
24161 45

Transmission Assembly
34526P 31

Transmission Case Assembly
33223 33

Transmission Cover Assembly
38290 33

Transmission Oil
27243P 33

Transmission Pin Tool
305P4 45

Trim Strip
33123R 11, 13

Tubing
39125 27

Tub-to-Pump Hose
35752 29
35753 29

12 Gauge Wire
45380 48

W

Washer
26509 ..... 33, 35
27015 35
29260 33
29443 19
35092 33
35535 35
52549 19
81392 19

Washer Shipping Brace
36926 45

Washtub
32940P 25
39252P 23
39387P 25
719P3 25

Wire Clip
504034 43
51291 43

Wire Harness
34529 48
34833 48
34971 48
36278 48

Wiring Harness
34529 39
34833 39
34971 39
35048 39
36278 39